Phys 124 - Freshman Project
Spring 2016

Building and Measuring the Efficiency of an Electromagnetic Accelerator

Altuğ Mert Mısırlıoğlu

Introduction

- Coilguns utilize electromagnets and act as linear motors, drawing ferromagnetic projectiles to the center of the coil.
- Capacitors are rapidly discharged to create a brief and intense current.
- Each coil in a coilgun is called a stage, and advanced designs use multiple stages.
- The simplest possible coilgun was constructed for this experiment.

Experiment Setup

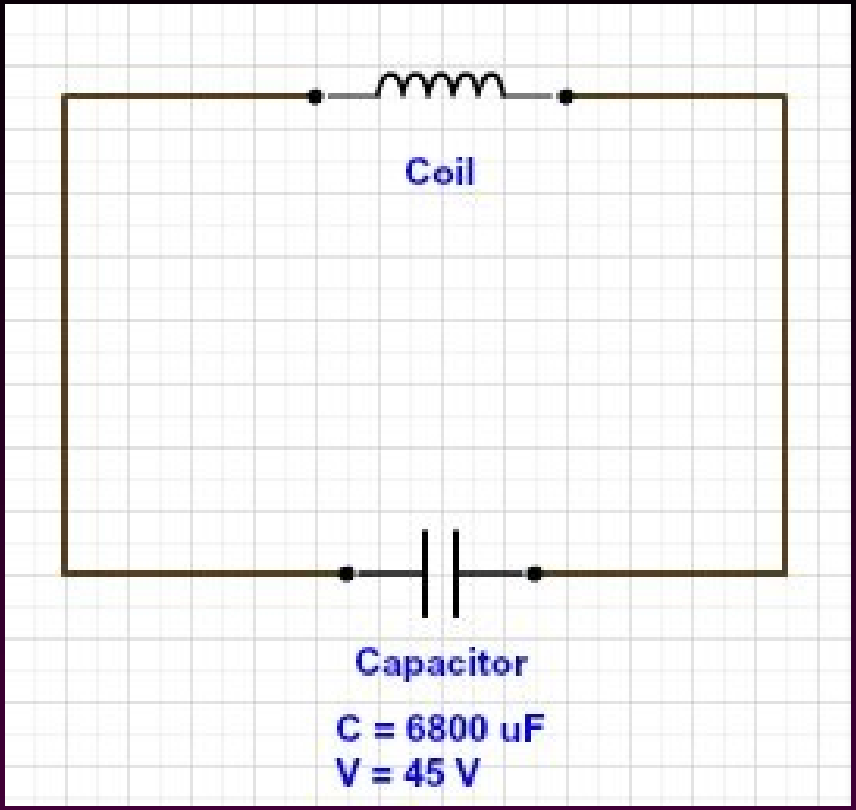

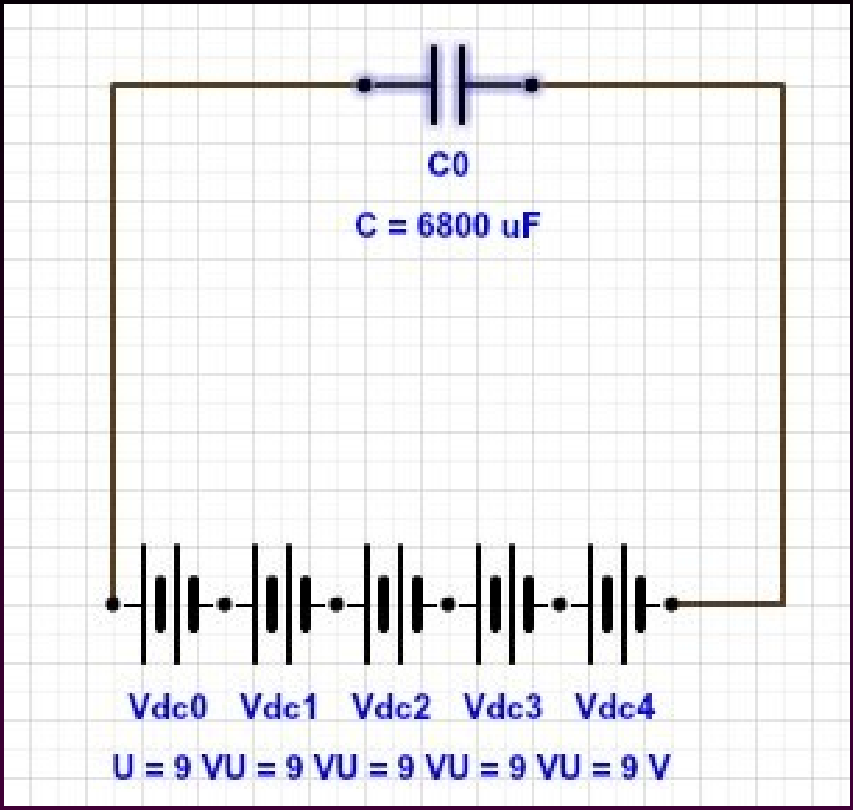

Charging Circuit

- Initial trials with 9V and 18V yielded no results.
- The circuit has no dedicated resistance component as the batteries in series are self limiting. This is not safe for higher energies.
- The capacitor charges quickly, blocking current.

Firing Circuit

This circuit contains the 6.8 mF capacitor, charged to approximately 45 Volts. As is apparent from the diagram, the two circuits were not connected with a switch, instead the wires were simply moved back and forth manually.

Experiment Setup

The Coil

The coil was winded by hand, as is evident by the irregularities. Around 15 meters of enameled wire, also known as magnet wire, was used, with multiple stacks of wire around the roughly 15 cm long tube. The tube itself is plastic, as it was salvaged from the head of a construction foam sprayer.

Experiment Setup

The Projectiles

The projectiles are steel balls, each weighing 0.35 g with a diameter of 4.5 mm. Iron would have been preferable for this purpose but only steel BBs were available.

Experiment Setup

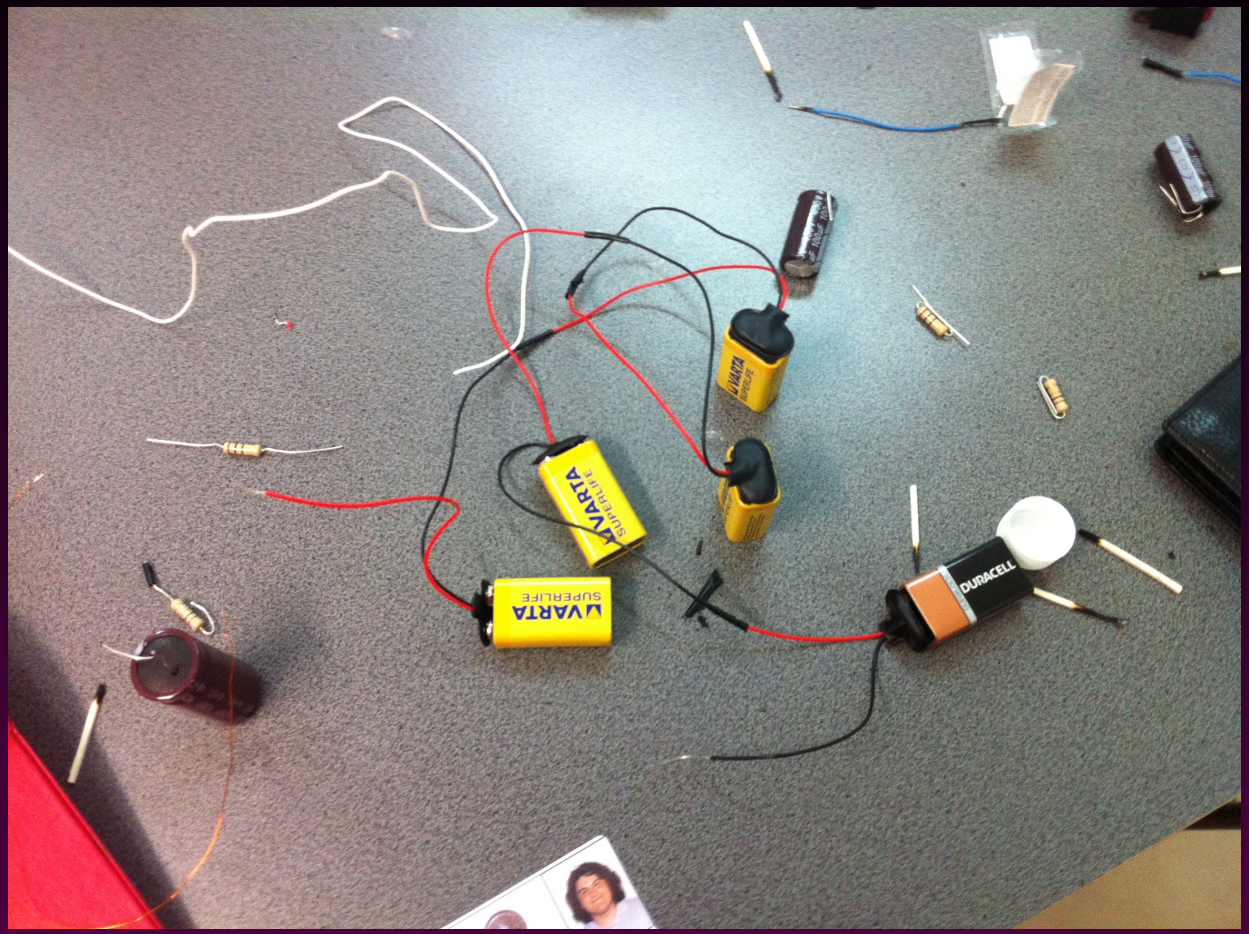

The Batteries

The capacitor was charged using this series of batteries, each at 9 Volts. As said before, their current output was limited by how they were already at the maximum they could put out because of there being no additional resistance in the circuit.

Overview

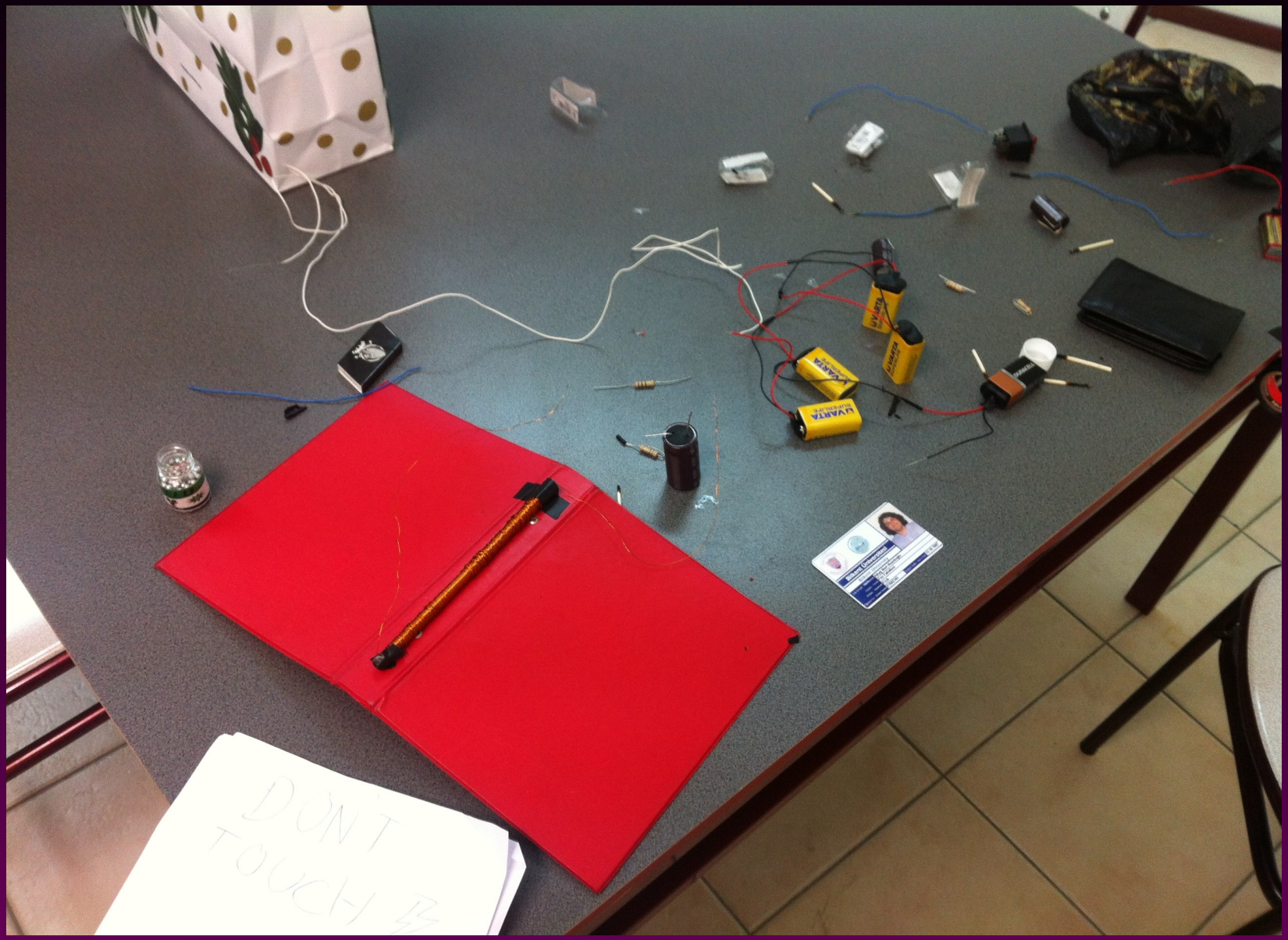

Observations & Calculations

- The system was used to successfully fire the pellets three times, but at velocities much lower than expected.
- Accurate measurements could not be made as the system wasn't sensitive enough.
- Projectile velocity can be estimated at 0.15 m/s considering the length of the tube and the travel time.
- Using this value and the mass of the pellets, which is 0.38 g per pellet, kinetic energy is 4.275E-6

Observations & Calculations

- The energy stored in the capacitor, if we are to assume it charged to exactly 45 Volts is 7.8975 Joules.
- This gives us an efficiency of 0.000054%.
- Amateur coilguns are expected to have an efficiency of 1%, which makes this design 20,000 times less efficient.
- It is safe to assume this particular design had serious flaws that pushed its effectiveness down drastically.

Problems and Possible Improvements

- The wiring was done by hand, meaning it was imperfect.
- The diameter of the coil wire used was 0.035 mm, which may have been too thin to conduct the current quickly enough.
- There was no measure to stop the current once the projectile crossed the center of the coil, but this seems to be an unlikely cause for the loss of efficiency due to the very slow speed of the projectiles to begin with. However, if the wire indeed had trouble conducting the current quickly enough, this may have been a factor.

Problems and Possible Improvements

- The projectiles are likely the biggest problem in this particular case. Steel is less susceptible to magnetic fields than iron, making it a poorer choice for a projectile in a coilgun.
- The tube was also not the perfect size for the steel projectiles, which would have further reduced effectiveness as the projectiles are no longer centered, nor as close to the coil wire as they could have been.
- A cylindrical projectile would be affected more by the magnetic field.

Conclusion

- Although the observed velocities were much lower than expected, this experiment was useful in discovering the challenges of coilgun construction. The movement was small, but it was not nonexistent, which would be a proof of concept for the coilgun design.
- Higher voltage or more capacitors could have been used, though such improvements would be overshadowed by simply fixing more fundamental problems with the current setup.
- Though the initial goal of accurately measuring the average of a simple, fully functional and single stage amateur coilgun was not reached, challenges of coilgun construction were identified through experimentation.
- In conclusion, coil wire conductivity, projectile shape and material, and controlling the current through the coil can all be considered to be some of the key aspects of successful coilgun design.

Thank you for listening!

Bibliography:

- https://en.wikipedia.org/wiki/Coilgun