BİLKENT UNIVERSITY

DEPARTMENT OF PHYSICS

GENERAL PHYSICS I LABORATORY MANUAL

Münir Dede, Atilla Erçelebi

----- This page is intentionally left blank -----

CONTENTS

INTRODUCTION

INTRODUCTION 4
GENERAL RULES FOR FRESHMAN PHYSICS LABORATORY 7
HINTS TO PERFORM THE EXPERIMENTS & FILL OUT THE REPORTS 8
BASIC LABORATORY INSTRUMENTS 10
DIMENSIONAL ANALYSIS 11
PRECISION AND SIGNIFICANT FIGURES 12
ERRORS: SOURCES AND THEORY 12
GRAPHS AND GRAPHICAL PROCEDURES 13

EXPERIMENTS

VELOCITY AND ACCELERATION 17
MEASURING FORCES AND FRICTION 29
CONSERVATION OF LINEAR MOMENTUM: COLLISIONS 41
ANGULAR VELOCITY AND ACCELERATION 53
ENERGY CONSIDERATIONS IN ROTATION 67
THE TORSIONAL OSCILLATOR 73

APENDICES

Appendix A: UNITS, CONSTANTS & SYMBOLS 81
Appendix B: PASCO - ROTATIONAL DYNAMICS APPARATUS 84
Appendix C: ANALYSIS OF RANDOM ERRORS IN MEASUREMENTS 86
Appendix D: METHOD OF LAST SQUARES IN CURVE FITTING 88
Appendix E: PROBABILITY DISTRIBUTIONS 90
Appendix F: NUMERICAL INTERPOLATION 102
Appendix G: NUMERICAL SOLUTIONS OF ROOT EQUATIONS 103
Appendix H: ELEMENTARY ANALYTICAL METHODS 105
Appendix I: TRIGONOMETRIC FUNCTIONS 110
Appendix J: HIYPERBOLIC FUNCTIONS 112
Appendix K: THE EXPONENTIAL FUNCTION 114
Appendix L: THE PROBABILITY INTEGRAL $\Phi(x)$ 115
Appendix M: THE BINOMIAL COEFFICIENTS: PROPERTIES & VALUES 116

INTRODUCTION

INTRODUCTION

Laboratory measurements make an essential part of the scientific method. We observe and measure physical quantities associated with natural phenomena, propose relationships between those quantities, and test the validity of those relationships through further measurements. Of course, relationships (the laws) of classical physics have been repeatedly confirmed. In this laboratory, you will be making measurements and calculations that verify these established laws. The objectives of this laboratory are:

- To introduce you to the significance of the experimental approach through actual experimentation.

- To apply the theory of the textbook and the recitation class to real-life problems for you to develop a better understanding of the fundamentals of classical and modern physics through hands-on experience.

- To introduce you to the methods of data analysis commonly used in science and engineering. To familiarize you with a large number of basic instruments and their applications; facilitate you to realize that such tools as graphing, difference analysis, calculus, are of fundamentals importance.

- To improve your ability of self expression through report presentation. Each of you is expected to prepare in advance for each experiment so that you will be able, before beginning the experiment, to answer questions based on the general content of the experiment and conclude your findings at the end of the experiment.

This semester a variety of experimental setups will give you experience with the basic concepts in dynamics and kinematics with instrumentation. The set of experiments arranged here are aimed to provide you gain some experience in the operation of several basic instruments, including frictionless air table and rotation dynamics setup. Equally important is the need to understand the interactions between an instrument and the system it is observing.

The basic topics covered in this unit include the study of Newton's laws of motion, conservation of energy, collisions, conservation of momentum, and periodic motions.

A mathematical analysis of a physical system almost always involves the use of idealized models which provide an approximate description of the properties of the system. It is important to bear this in mind when comparing your analytical predictions with actual observations of the behavior of the system; the two will seldom agree exactly. The disagreement can be due either to experimental errors

(that is, errors in the measurements) or to the lack of precision of the model, or both, and it is important to understand the distinction.

Although much of your experimental work is concerned with making quantitative measurements, the importance of *qualitative* observations should not be overlooked. Often qualitative observations, including the effects of changing the variable quantities in the experimental setup, will help you gain additional insight and physical intuition for the physics of the situation. It is always useful to record these qualitative observations, as well as the numbers resulting from your quantitative measurements, for later reference.

GENERAL RULES FOR FRESHMAN PHYSICS LABORATORY

The laboratory significantly affects the overall grade that you receive for the course. The following rules are going to apply in relation to the laboratory of the course:

- All students must participate in all of the scheduled lab sessions. There will be no make-up sessions without an official excuse (e.g., a proper report from the Bilkent Health Center). Grades from all lab sessions will be considered to determine the final lab grade. If a student misses two or more lab sessions without an official excuse, her/his lab grade will automatically be "F" and fail not only the laboratory but the entire physics course. To be satisfactory average of 6 lab grades bust be at least 60/100.
- There will be no make-up sessions without an official excuse (e.g, a proper report from the Bilkent Health Center) for any kind of personal problems. The health reports must fulfill the requirements stated by the Health Center and the articles 5.1 & 5.2 of the University Regulations for Teaching Examinations and Assessments. Note that, a student can have a make up for one experiment only in a semester! More is not allowed even if a valid health report is submitted
- Students must be present in the lab on time. Nobody will be allowed to participate in a lab session if he or she arrives late. If students need to visit the Health Center during lab hours, he/she must come to lab in time and inform the assistant first. Otherwise, any papers (other than health reports) showing that the student visited the Health Center during the lab hours will not be accepted.
- Students must come to the laboratory sessions prepared. There will be quizzes at the beginning of each session, which will contribute to 30% weight of the overall lab grade. The quiz may be about the theoretical background of the experiment and/or the experimental procedure.
- Students are responsible for the proper use of the equipment in the lab. If you are not sure about the proper use of any piece of equipment, please ask your assistants before using. This is for your safety and the equipment, as well. Anyone who damages equipment in the lab is expected to pay for it.
- The lab staff is responsible to supply the experimental setup only. Any other equipment (pencil, eraser, ruler, protractor, set square, calculator, graph paper, etc.) will not be provided by the lab staff, and is solely under the responsibility of the student.
- Lab reports should be completed during the experiments and hand into the assistants the end of the session. The reports should contain sufficient information to show the work do in the lab, and the results of the experiment.
- Everyone must do the experiments with the group that they are originally assigned to.

HINTS TO PERFORM THE EXPERIMENTS & FILL OUT THE REPORTS

Experimental setup and procedure:

- Performing the experiment, please double-check the apparatus provided, and make sure at once that there is no shortage of equipment or malfunctioning equipment.
- Set up the equipment in accordance with instructions. Proceed carefully and develop scientific methodical work habits.
- Remember that scientific equipment is extremely expensive and frequently quite susceptible to damage. If the setup is at all complicated, ask the lab assistant to inspect your layout before you proceed with the actual performance of the experiment.
- Fill in each part systematically in the form supplied by the lab staff. Clarify each step and write legibly.

Data & Measurement

- All measurements must be recorded directly into the lab report.
- You must also know the limits of your measurements. For example, if you are using a ruler with a millimeter resolution on it, recording a measurement more accurate than mm is nonsense (i.e., you cannot measure 3.75 cm; it must be 3.7 or 3.8 cm).
- Place the units of the quantities being measured at the top of the data columns (these units will mostly be provided by us at the lab report. If not, you should decide and write the appropriate units). All the measured data should have appropriate units.
- Data may be secured by a group (or a person), but under no circumstances may a students use data that belongs to some different group.

Computation Outline:

- State all formulae.
- Identify all symbols.
- Watch your number of significant figures. Do not retain a greater number of significant figures in a result computed from multiplication and/or division than the least number of significant figures in the data from which the result computed.

Graphs and Results:

- Give the graph a concise title.
- The dependent variable should be plotted along the vertical (y) axis and the independent variable should be plotted along the horizontal (x) axis. Label axes and include units.
- Scale the axes carefully. First look at your data. The label of the major ticks of each axis must cover the maximum value of your data. The scale must be arranged such that you can easily find value of data points. Then label the major ticks only. You can show the minor ticks if you want.
- Indicate your data on the graph with a dot. Do not draw lines connecting the data points and the axis. Also do not show the data points' values on the axis.
- Draw the best line through the data points. This line does not have to coincide with all the data points.
- When reporting graphical results, show carefully slope calculations and the values obtained from the axes of the graphs. The slope must be calculated by taking two points on the best line, not the data points. You must not use protractor to find slope.
- List the numerical results as found in the computation outline. If the results are qualitative, describe them briefly.
- Pay attention to proper units.

Discussion or Conclusion:

- Think about why the experiment was performed.
- Discuss the meaning of your graphical results. Please do not explain how you have performed the experiment steps.
- If several methods are used, describe the benefits of a particular analytical approach as compared to others. If only one approach is used, discus its significance.
- Make sure to compare what you expect to observe in the experiment and what you indeed observed during the experiment.
- Compare the expected value and the observed value by means of a percentage calculation. Just stating that “It is less/more than the expected value.” is not instructive.
- Make a brief error analysis. It does not matter how much error you obtained. The important thing is how you explain the error. This does not mean that you can make mistake as you want. You must minimize the personal errors,

Questions

- Answer all the questions listed at the end of the report.
- Explain briefly your solutions.

BASIC LABORATORY INSTRUMENTS

Most instruments in the introductory physics laboratory are fairly simple and the principles on which they operate can often be understood without any advanced work. In this section the characteristics and description of some typical laboratory apparatus is discussed. Not all the details of the instruments are given, but only some of the widely used measuring devices are explained.

Air Table: The Air Table is constructed with a flat glass surface that supports the recording and carbon paper. Compressed air is supplied to the pucks through light surgical tubing and exits from the bottom of the puck, causing it to float over the recording paper.
The motion of the pucks is recorded by spark recording. Connection to the spark generator is provided by fine chains running down the air tubes. The spark jumps from a contact in the center of the puck leaving a mark on the recording paper. The Basic Air Table comes complete with air compressor, Spark Generator with foot switch, two steel pucks, an air supply with hose, Velcro puck collars, springs, puck weight, edge pulley, suction cup center post, and recording paper kit.

Rotational Dynamics Apparatus: The rotating system consists of two disks which can be arranged as of equal mass (two steel disks) or of unequal mass (one steel, one aluminum). They can rotate independently (even in opposite directions), separated by a thin cushion of air or they can rotate as a single mass, one sitting on top of the other. The rotational velocity of each disk is independently monitored with the built-in optical detectors. Each disk has a pattern of alternating white and black bars on its side. The optical detectors count the number of bars that pass per second, then display the reading as counts/sec on the digital display (for either the upper or the lower disk depending on the position of the switch on the top of the display housing); thus providing a continuous and accurate measurement of angular velocity. Because friction is minimal and the optical detectors are highly accurate, experiments give results that closely match theory. See Appendix B for the detailed description of the device.

DIMENSIONAL ANALYSIS

When working through a complicated derivation, it is important to be sure that the units on one side of the resulting equation are the same as those on the other side. For example, in a calculation of the distance traveled by an object, one could be certain that some mistake had been made if the result came out in units of mass. An analysis of this sort is usually called *dimensional analysis* - a technique used in the physical sciences and engineering to reduce physical properties such as acceleration, viscosity, energy, and others to their fundamental dimensions of length, mass, time and charge. Whether the actual units of the fundamental dimensions are in the cgs or mks system is immaterial. This technique facilitates the study of interrelationships of systems and their properties, and avoids the nuisance of incompatible units.

As an example of the use of dimensional analysis, suppose one reaches an equation of force

$$f = \frac{3}{5}\rho v^2$$

where ρ is the mass per unit volume, or density, and v is the speed. Dimensional analysis will never tell whether the factor 3/5 is correct since it is dimensionless, that is, a pure number. However, let us see whether ρv^2 has indeed dimensions of force. Using *M, L,* and *T* to denote mass, length, and time, we obtain

$$\rho = [M][L]^{-3} \qquad v^2 = [L]^2[T]^{-2}$$

and hence

$$\rho v^2 = [M][L]^{-3}[L]^2[T]^{-2} = [M][L]^{-1}[T]^{-2}$$

On the other hand, force is mass times acceleration; acceleration is velocity divided by time, and velocity is length per time; so that

$$\text{Force} = [M]\ [L]\ [T]^{-2}.$$

We thus reach the conclusion that there should be some mistake in the derivation since the dimensions on one side of the force equation are not consistent with the dimensions on the other side.

As a second illustration of the use of dimensional analysis, consider the case of a spherical body moving slowly through a viscous medium such as oil, for instance. In such a case, the damping force opposing the motion is governed by Stoke's law:

$$f_{damp} = -6\pi\eta r v$$

where η is the coefficient of viscosity of the medium, r is the radius of the sphere, and v is the velocity. The dimensions of the coefficient of viscosity can readily be achieved through the relation: $-q \sim f/(rv)$, i.e.,

$$\eta = \frac{[\,force\,]}{[\,L\,][\,velocity\,]} = \frac{[\mathrm{M}]\,[\mathrm{L}]\,[\mathrm{T}]^{-2}}{[\mathrm{L}]\,[\mathrm{L}]\,[\mathrm{T}]^{-1}}$$

$$= [\mathrm{M}]\,[\mathrm{L}]^{-1}[\mathrm{T}]^{-1}$$

PRECISION AND SIGNIFICANT FIGURES

In all branches of science we deal with numbers which originate in experimental observations. Statistical considerations are important for that measurements are never exact; the numbers which result are of very little value unless we have some idea of the extent of their inaccuracy. If several numbers are used to compute a result, we need to know how the inaccuracies of the individual numbers influence the inaccuracy of the final result. A clear understanding of how to treat experimental errors on a statistical basis is provided in the preceding sections. In this section we shall be content only with the description of how to record the measured values on an experimental data.

As the quality of measuring instruments is improved, the experiments can be carried out at ever increasing level of precision; that is one can extend a measured result to more and more significant figures and correspondingly reduce the experimental uncertainty of the measurement. The number of significant figures thus implies something about the estimate of the precision of the result. That is, in measuring a length, for instance, the result L = 4.2 cm implies that we know less about L than the value L = 4.217 cm. When we declare L = 4.2 cm, we mean that we are reasonably certain that L probably lies between 4.1 cm and 4.2 cm, while expressing L as 4.217 cm means that it probably lies within 4.216 cm and 4.218 cm.

If you express L as 4.2 cm when in fact you really have found that L is 4.217 cm, you are withholding information that might be important. On the other hand, if you express L = 4.217 cm when you actually have no basis for knowing anything other than L = 4.2 cm, you are being somewhat dishonest by claiming to have more information than you really do. In presenting the results of measurements and calculations it is equally as wrong to include too many significant figures as too few. (In particular, do not write down all 7 or 8 digits of your calculator display if they are not justified by the precision of the input data!)

ERRORS: SOURCES AND THEORY

Statistically, error is the difference between a true value and an approximation to that value. The relative error is the numerical difference by the true value; the percentage error is this ratio expressed as a percent. A variety of errors and their sources are as follows:

- *Instrumental errors:* those that have as their source inaccuracies in the instruments used for observation.
- *Personal errors:* those that arise from the different practices and abilities of human observers.

- *Sampling errors:* Next to errors of observation, a further important kind of error is that due to sampling. The larger the sample, the smaller the sampling error will be.
- *Interpolation, extrapolation errors:* Still other kinds of errors are concerned with interpolation or extrapolation. In using mathematical tables, for example, one often wants to read a table to one or more decimal place than those tabulated, and it is common to make a linear interpolation between two adjacent figures in order to extend table. Since the curve reflected in figures, however, may in fact be parabolic or exponential or the like, such an assumption of linearity may generate error. Similar problems arise in extrapolating beyond the limits of a given set of values.
- *Rounding errors:* those introduced in the representation of a number by deleting the less significant digits and applying a rule of correction to the portion remaining. An example would be rounding off 7.4381.. to 7.44.
- *Truncation errors:* those introduced in the representation of a number by omitting certain digits. An example would be the truncation of the last few digits of a number, such as by shortening 3.8495.. by 3.84.
- *Systematic errors:* (as the name suggests) are those which are intrinsic in the equipment system and introduces a systematic discrepancy in all observations. Systematic errors may change with time either because of some property of the system or because of variation of some external influence such as temperature of the room, line voltage or building vibration. There are no general principles for avoiding systematic errors; only an experimenter whose skill has come through long experience can design experiments to avoid systematic errors, and detect and correct them when they occur.
- *Random errors: so* called because its causes are not understood. This type of error reflects the fact that, when observers make repeated measurements, some variation in the results will occur no matter how accurate the instruments may be. In practice the attention of researchers has been directed mainly to random errors.

GRAPHS AND GRAPHICAL PROCEDURES

A common method of expressing a relation between two variable quantities is by a Cartesian graph (named after Rene Descartes). A Cartesian axis system consists of two mutually perpendicular lines usually called, respectively, the x and y axes. The coordinates of a point are obtained by projecting perpendicularly on these axes and assigning values by means of a scale on the axes. If f(x) is a function of *x,* then for a value of *x* there will be a y value, $y = f(x)$, and the function $f(x)$ is graphed by marking the points with these coordinates, *x, y.* Such a graph permits the ready appreciation of certain characteristics of the function. Also a number of different functions can be readily compared by their graphs.

It is clear that nothing is essentially changed if the values that are marked on the axes are not proportional to the distances from the origin but more or less arbitrary scales are used. Points, the coordinates of which satisfy a given equation, can be plotted as before

and a curve can be drawn from which corresponding values can be read. The form of the curve can be altered and in some cases simplified. A basic idea is to use such scales that the graphs of the equations under consideration become straight lines, which are easy to draw. For instance, the equation

$$af(x) + bg(y) + c = 0$$

that restricts a linear relationship in a function of x and a function of y in which a, b, c *are* constants, becomes a straight line in an X, Y plane, i.e.,

$$aX + bY + c = 0$$

if the distances X and y along the axes to the marks x and y are determined by the functions

$$X = f(x) \quad \text{and} \quad Y = g(y)$$

Well known examples based on this idea are the logarithmic and semi-logarithmic plots. The former plots use the scales

$$X = \log z \quad \text{and} \quad Y = \log y$$

and are convenient for plotting graphs of the relations of the form

$y^m = ax^n$.

Because this may be written

$$m \log y = n \log z + \log o,$$

the graph in the scales X and y is a straight line.

The semi-logarithmic plots have the scales of which one is linear and the other is logarithmic. They are useful in plotting the results of experiments in which one quantity is an exponential function of the other.

A logarithmic scale can also be used to compare quantities of greatly varying size. An example of this is the line scale for the frequency of electromagnetic waves, in which the frequency of interest ranges from 1 Hertz to 10^{19} Hertz.

Notes on Graph Plotting:

- Give precise title to the graph.
- In plotting a graph, label the coordinates along each axis. Give quantity and units.
- Scale the axes so that the gathered data can be marked easily and the paper used as much efficiently as possible. Do not use the data points as the scaling of the graph. They do not necessarily have to be on the scaled points all the time.

- Experimentally determined points can be located by using a dot. Horizontal and vertical lines passing through this dot permit the consideration of one coordinate at a time. These imaginary lines should not be drawn on the graphs but, if needed, can be used to check the corresponding coordinates.
- When more than one curve is drawn, it is desirable to distinguish between them by using different symbols, dotted or dashed lines.
- Curve fitting often requires the assumption of a certain type of equation, such as linear, power law, exponential or the like. The process of matching an equation to a set of data points is called curve fitting. The principal questions that arise when fitting a curve are: (a) Should the curve pass through every point? or (b) Should it be drawn smoothly neat, but not necessarily through every point? Actually, very little is known of what occurs between points. When checking a law or other functional relation, there is usually reason to suppose that a uniform curve (or straight line) will result. If one or even two points are quite far from the apparent curve, then one should check the experimental data to see if a mistake has been made. If none appears, the point may be, in general, disregarded.

EXPERIMENTS

1. **VELOCITY AND ACCELERATION**
2. **MEASURING FORCES AND FRICTION**
3. **CONSERVATION OF LINEAR MOMENTUM: COLLISIONS**
4. **ANGULAR VELOCITY AND ACCELERATION**
5. **ENERGY CONSIDERATIONS IN ROTATION**
6. **THE TORSIONAL OSCILLATOR**

EXPERIMENT 1

VELOCITY AND ACCELERATION

Objective:

The purpose of this experiment is to study the motion with constant velocity and constant acceleration. The Newton's laws of motion will be examined

Introduction:

Mechanics is the study of the motion of objects and their interaction as comprehended by basic physical principles. Whereas classical mechanics, or Newtonian mechanics, deals with objects the size of which is large compared with that of the atom and that move at speeds far less than that of light, quantum mechanics, or wave mechanics, is the basis for understanding atomic and subatomic phenomena, and relativistic mechanics concerns high-speed phenomena.

Kinematics is an abstract study of motion that aims to provide a description of the spatial position of points in moving bodies, the rates at which the points are moving (velocity), and the rate at which their velocity is changing (acceleration).

For a point moving in a straight path, a list of corresponding positions and times would constitute a suitable scheme for describing the motion of the point. A continuous description would require either a graphical plot or a mathematical formula expressing position in terms of time.

Newton's three laws are the basic postulates (self-evident truths) governing the relations between the forces acting on a body and the motion of the body. Although they were formulated for the first time in usable form by Isaac Newton, they had been discovered experimentally by Galileo about four years before Newton was born. The laws cover only the overall motion of a body, i.e., the motion of its centre of mass - and not any rigid body motion such as rotation. This is equivalent to assuming that the body is a particle.

According to Newton's first law, an object set in motion on a perfectly smooth, level, frictionless surface continues to move in a straight line with constant velocity. According to Newton's second law, when a force is applied to an object, the object experiences an acceleration proportional in magnitude to that of the applied force. This relationship is usually expressed as

$$\sum F = ma \qquad (1)$$

in which the symbol Σ, which means the sum, indicates that if more than one force acts on the object, the vector sum of the forces must be used. In this experiment the principal forces will be constant, that is they will not vary with time. A simple daily example of providing an accelerating force on an object is to tilt the surface over which the object rests; the acceleration may then be predicted from the angle of tilt, and it may also be determined experimentally from measurements of the positions of the object at a succession of time intervals.

In this experiment we shall consider the motion of a puck along a straight path on an air table. The position of the puck is described at any instant by giving its distance from some reference point on the air table. We call this distance *x;* clearly, it varies with time *(t)* when the puck moves, so *x* is a function *of t.*

Average and instantaneous velocities: The average velocity during a time interval between *t1* and *t2* in which the displacement has changed from *x1* to x2 is defined as

$$\overline{\upsilon} = \frac{x_2 - x_1}{t_2 - t_1} \qquad (2)$$

The instantaneous velocity is thought of as the value of the average velocity when the time interval becomes extremely short, that is to find the value which *v* approaches as *At* approaches zero; this is called the *limit* of *v* as Δt —► 0 and is the mathematical definition of the instantaneous velocity,

$$\upsilon = \lim_{\Delta t \to 0} \frac{x_2 - x_1}{t_2 - t_1} = \lim_{\Delta t \to 0} \frac{\Delta x}{\Delta t} \qquad (3)$$

This expression is also called the derivative of *x* with respect to *t.*

Numerical differentiation: An alternative way to obtain the instantaneous velocity is to make use of the *Lagrange's* formula for numerical differentiation for equally spaced abscissas. Suppose that you have the data consisting of five successive positions: x_{-2}, x_{-1}, x_0, x_1, and x_2 measured at times t_{-2}, t_{-1}, t_0, t_1, and t_2, respectively. The derivative of *x* with respect to *t* at the central point, i.e. at time $t = t_0$ is given by

$$\frac{dx}{dt} = \frac{(1/3)}{\Delta t}\left[\frac{1}{4}x_{-2} - 2x_{-1} + 2x_1 - \frac{1}{4}x_2\right] \qquad (4)$$

A review of the kinematics relations for one-dimensional motion with constant acceleration, is

$\upsilon = \upsilon_i + at$	Relates velocity to time, given the initial velocity
$x - x_i = \upsilon_i t + \frac{1}{2}at^2$	Relates displacement to time, given ν_i
$x - x_i = \frac{1}{2}(\upsilon_i + \upsilon)t$	Relates displacement to time, given ν_i and ν
$\upsilon^2 - \upsilon_i^2 = 2a(x - x_i)$	Relates speed to displacement, given ν_i

Questions to Think About:

1. At a certain instant in time, an object which is freely falling towards earth has a speed of 15m/s. What is this object's downward speed exactly one second later (assuming the object does not hit the ground)?

2. The gas pedal on a car is often called the “accelerator”. Why is this so? Is “accelerator” an accurate name? Hint, imagine pressing the pedal some amount and then holding it there as the car moves straight. Then, sketch position of the car versus time or velocity of the car versus time.

Equipment:

The following equipment will be supplied.

- An air table & its accessories

The following items must be brought by you and will not be supplied.

- A 30 cm. ruler
- A scientific calculator

Procedure:

PART A: Motion with constant velocity

1. Level the air table using the three adjustable screws, so that the effect of the gravitation is minimum.
2. Make sure that there are no obstacles under the paper such as, accumulation of dust or eraser pieces left from previous user.
3. You will only use one of the pucks, so place the other one on one corner of the frame folding the paper to prevent it from being moved. However, both pucks

have to be well over the carbon paper in order to produce dots on the ordinary paper by sparking.

4. Adjust the timer to the desired value. The spark timer has different sparking frequencies from which you may select before starting an experiment. You can also switch to a more appropriate frequency judging your data.
5. Using the switch pedal activate the vacuum pump and observe how the puck is moving. Make some trial pushes with the puck in order to feel confident with the setup.
6. Pressing two pedals together and giving a push to the puck, simulate a motion with constant velocity and generate a track for the measurement.
7. The spark positions are recorded as black prints on a paper laid on the air table, thus providing a permanent record of the successive positions of the pucks at a succession of equally spaced time intervals. You will end up with a pattern similar to the one shown below which is exaggerated for the seek of visualization. Ignore the first few data as they contain the initial acceleration do to the push. Start to measure the displacement (not the distance between two points!) and record the values in the Table 1. You must fill the entire table.
8. To find out exactly how fast the puck has moved we have to make Δt as small as possible. We thus proceed by choosing shorter and shorter time intervals. To do this, use the data pairs given and complete the Table 2.
9. Make a plot of the average velocity v as a function of the time interval Δt. Extrapolate your plot to $\Delta t = 0$. What is your estimate of the instantaneous velocity? Record your value in the desired location.
10. An alternative way to obtain the instantaneous velocity is to make use of the Lagrange's formula for numerical differentiation for equally spaced abscissas. Use the formula and calculate the instantaneous velocity around the data point 8 which is the middle point of the measured data range. Show your work and write down the result in the space provided.
11. Compare the values obtained from the graph and the Lagrange's formula.

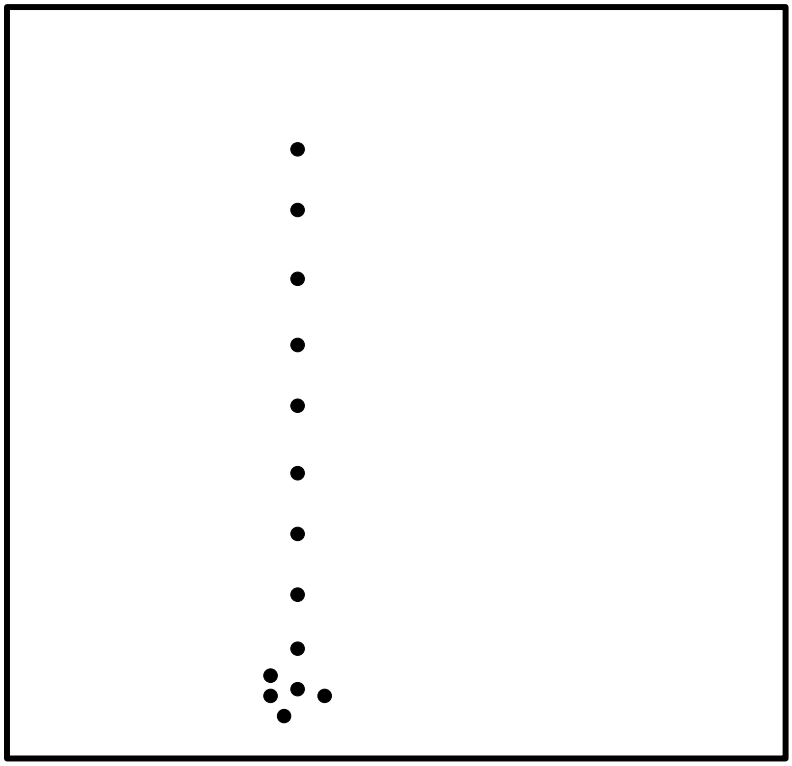

Figure 1: Schematic appearance of tracks of motion with constant velocity

PART B:

1. Place the wooden cube beneath the middle adjustment screw to give a proper inclination of the air table. The number on the cube indicates the sinus of the angle of inclination.
2. Place one of the pucks at the highest point of the paper and activate the pedals. You will receive a pattern similar to shown in Figure 2 below. When the puck is released from rest, it accelerates downward with constant acceleration, provided air resistance is negligible. The magnitude of this acceleration varies by a few tenths of a percent, depending on location, but it is approximately 9.80 m/s^2.
3. Start to make your measurements but this time as we are interested in calculation of the earth gravitational field you must not ignore the first data points. Record the corresponding values in the Table 3.
4. Make a plot of x vs. t.
5. If *x* is plotted as a function not of t but of t^2, the result should be a straight line whose slope is a/2 Thus, make this plot and determine the acceleration of the puck.
6. Rather than to measure this acceleration directly, we measure the acceleration of the puck; from this we can compute *g.* If the angle of inclination of the air table is θ, the acceleration of the puck down the table is given by:

$$a = g\sin\theta$$

Thus, calculate and compare the gravitational constant with its theoretical value.

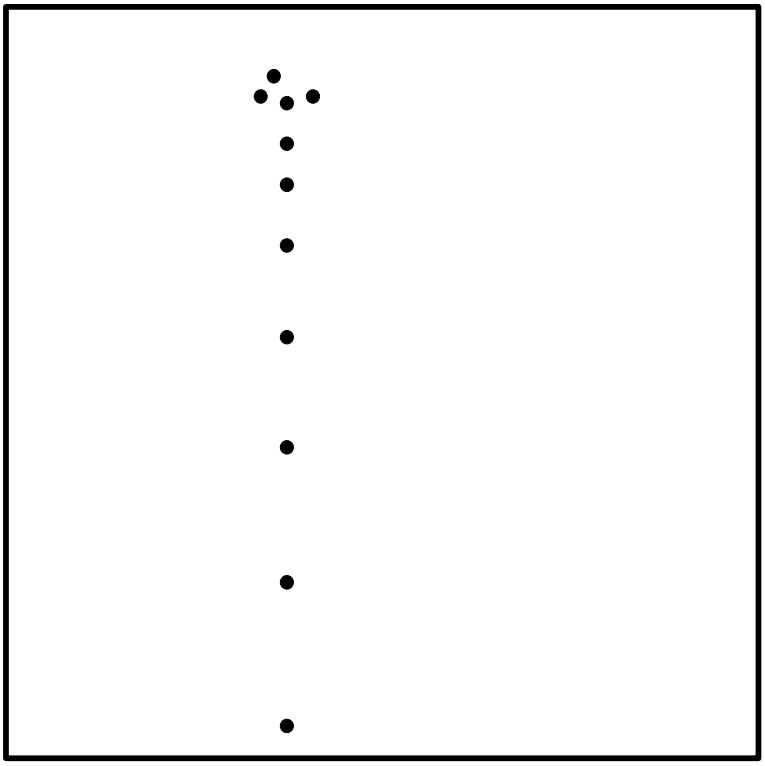

Figure 2: Schematic appearance of tracks of motion with constant acceleration

Name & Surname :	ID#:	Section:
Partner:	Total Grade:	

Data & Results: [20]

Table 1: Motion with constant velocity

Data Point	Time ( )	Displacement ( )
1		
2		
3		
4		
5		
6		
7		
8		
9		
10		
11		
12		
13		
14		
15		

Table 2: Average velocity

Data Pairs	Δt ( )	Δx ( )	v_{avg} ( )
1-15			
2-14			
3-13			
4-12			
5-11			
6-10			
7-9			

Instantaneous velocity (from the graph)	Instantaneous velocity (Lagrange`s formula)	% Error

Name & Surname : **ID#:** **Section:**

Table 3: motion with constant acceleration

x( )	t ( )	t^2( )

g (theoretical)	g (experimental)	% Error

Questions:

1) [2.5] Average velocity and instantaneous velocity are generally different quantities. Can they ever be equal for a specific type of motion? Can the instantaneous velocity of an object ever be greater in magnitude than the average velocity? Can it ever be less?

2) [2.5] Measurements on a moving particle show that its average velocity is equal to its instantaneous velocity at every instant. What can you say about its acceleration?

3) [2.5] What are the possible sources of experimental errors in the experimental setup? Is it more appropriate to use a heavy (or light) puck, a small (or large) tilt angle in order to make a better estimate for *g?*

4) [2.5] Suppose you travel a distance *d.* If you travel at speed v_1 for half the total distance and at speed v_2 for the other half of the total distance, derive an expression for your average speed for the complete trip.

Conclusion: [10]

Name & Surname : **ID#:** **Section:**

Plot 1 [10]

Name & Surname : ID#: Section:

Plot 2 [10]

Name & Surname : **ID#:** **Section:**

Plot 3 [10]

EXPERIMENT 2

MEASURING FORCES AND FRICTION

Objective:

The purpose of this experiment is to study the interaction of various forces on an object and the resulting status of it.

Introduction:

One of the basic aims of physics is to investigate interaction between bodies and consequences of these interactions on the physical state of bodies. Here, the word "bodies" may change from galaxies to subatomic particles and strength of "interactions" differ by several orders in magnitude. Nevertheless, the fundamental observation method for these interactions and physical state of bodies is the same irrespective of the scale of the system: A well known interaction is used as a gauge (measurement device) for determining the features of the unknown interaction.

In classical mechanics (of rigid bodies) the physical state of the bodies is their sense of motion. It depends on both intrinsic properties of the body (e.g., its mass, moment of inertia, coefficient of friction, shape etc.) and its environment (i.e., the forces applied on the body by external agents). Newton's first law states that:

If no net force is exerted on a body it either stays motionless or moves on a straight line with constant speed.

Confining ourselves to static situations we conclude that the (vectorial) sum of all forces acting on a body is zero. Thus, if an unknown force agent and a gauge of force (in this case a spring) leads the particle to stay in equilibrium, the force applied by the unknown agent has the same magnitude and opposite direction as the force gauge.

The force gauge you are going to use in this experiment is the mechanical spring. The force applied by an ideal spring is given by Hooke's law:

$$F = -kx \qquad (1)$$

where x is the displacement of the end point of the spring from the equilibrium position (where the force exerted by the spring vanishes) and *k* is called the spring constant. In reality springs are not ideal, but the above equation is a very good approximation for small deviations from equilibrium (compared to the length of the spring). One can scale a spring using a well known and easily accessible force, such as gravity.

Friction: Friction is the force that resists the sliding of one solid object over another. About 20% of the engine power of automobiles is consumed in overcoming frictional forces in the moving parts.

Two simple experimental facts characterize the friction of sliding solids. Friction, first, is nearly independent of the surface area in contact. Secondly, it is proportional to the load or weight that presses the surfaces together. If a pile of three bricks is pulled along a table, the friction is three times greater than if one brick is pulled. This second fact means that the ratio of friction to load is constant; and this constant dimensionless value is called the coefficient of friction. Because the friction thus far described arises between surfaces in relative motion, it is called the kinetic friction.

Static friction, in contrast, acts between surfaces at rest with respect to each other. The value of static friction varies between zero and the smallest force needed to start motion. This smallest force to start motion, or to overcome static friction, is always greater than the force required to continue the motion, or to overcome kinetic friction.

In summary, frictional forces are given by the below expressions:

$$F_k = \mu_k F_n, \quad F_s \leq \mu_s F_n, \quad (\mu_k \leq \mu_s) \qquad (2)$$

where F_n is the (normal) force with which the surfaces are pressed together and μ_k and μ_s are the kinetic and static friction coefficients, respectively. In reality μ_k depends on the relative velocity of surfaces that is the second relation (together with Newton's second law) is a highly nonlinear one. However, for small velocities and simple surfaces this nonlinearity effect may be neglected. The second relation is in the form of an inequality since the frictional force F_s is equal to the applied lateral force (in magnitude, but opposite in direction) until this force reaches to the critical force $\mu_s F_n$, when the surfaces start to slide on one another.

Questions to Think About:

1. Suppose the block were made to move up the inclined plane with a constant velocity by suspending masses on a string over a pulley. Derive an equation for μk for this case. Your value for the coefficient of kinetic friction should be expressed in terms of the angle of incline, tension in the string, and the weight of the block.
2. Three forces are in equilibrium on a force table. One has a magnitude a 10 N. The other two have equal magnitudes. What minimum magnitude could these two forces have? What maximum magnitude could these forces have? Explain.

Equipment:

The following equipment will be supplied at lab.

- A force measurement setup

The following items must be brought by you and will not be supplied at lab.

- A ruler
- A scientific calculator

Procedure:

PART A:

1. Attach the spring balance on the board, make sure it is vertical. Null the reading using the zeroing screw. If you hang the mass hanger before you zero the reading you must not forget to add its weight to the measurements

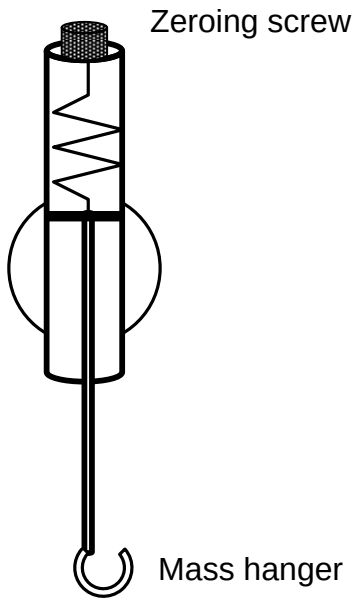

Figure 1: Spring balance

2. Add the provided masses one by one and read the corresponding displacement of the spring. Record your reading in Table 1.
3. Plot F as a function of x and determine the spring constant from this graph.

PART B:

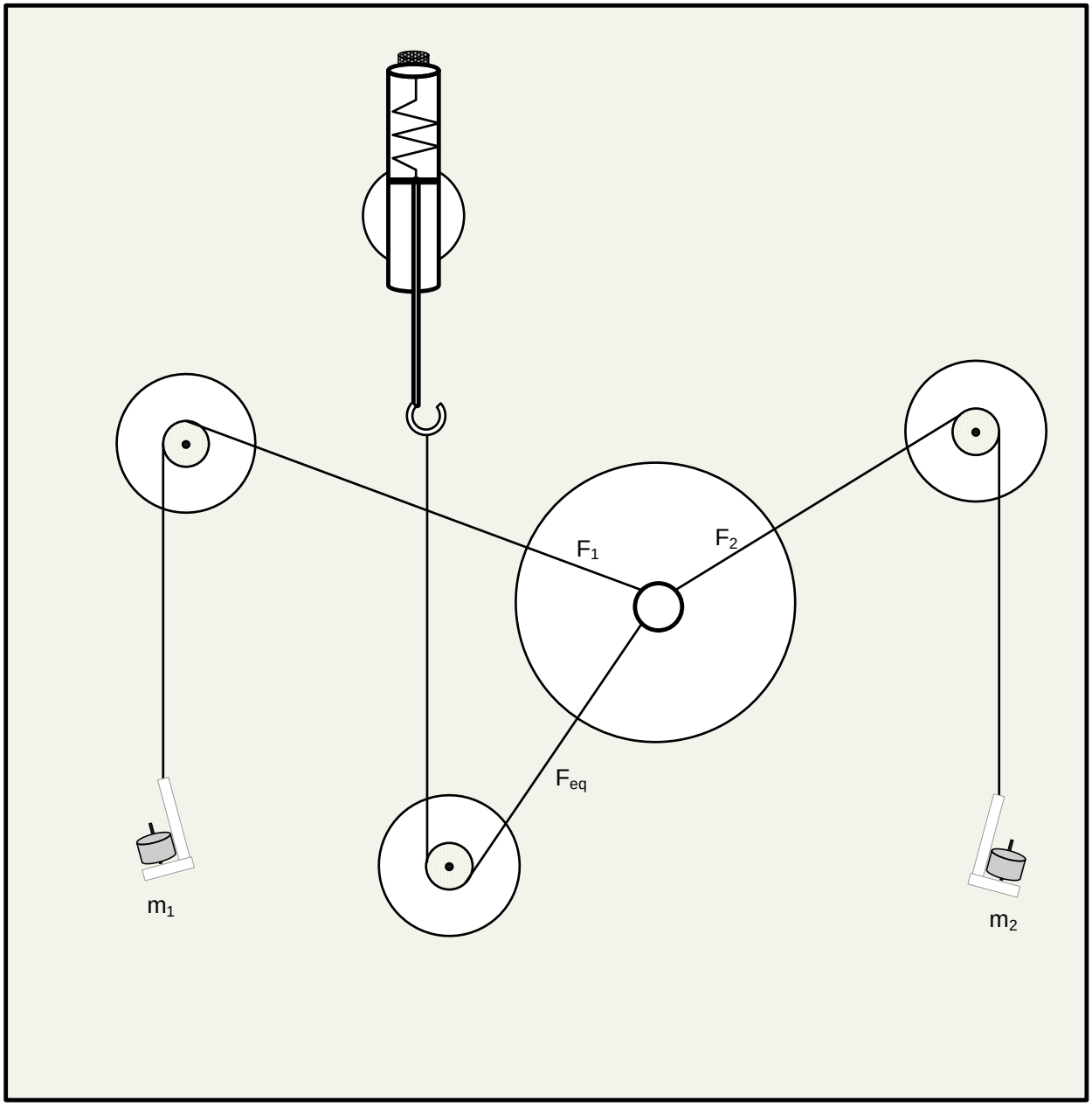

Figure 2: Balancing forces

1. In this part of the experiment, you will draw the free body diagram of Figure 2, three forces balance each other. On the diagram use the parallelogram method to compare the sum of F_1 and F_2 (obtain this by using parallelogram method) with F_{eq}. The diagram must be drawn with an appropriate scale and the angles must be exact. Indicate all the physical quantities.

PART C:

1. In this part of the experiment, you now use pulleys and hanging masses as you will investigate some of the properties of static friction. The essential components needed in this section are the inclination plane and the friction block.
2. Assemble the equipment setup as described in Figure 3. Make sure the plane is parallel with respect to board. Increase the hanging mass gradually by adding paper clips until the block barely starts to move; and record the frictional force on all the three faces A, B and C of the friction block. Repeat this for different values of the normal force and tabulate your recordings in Table 2.

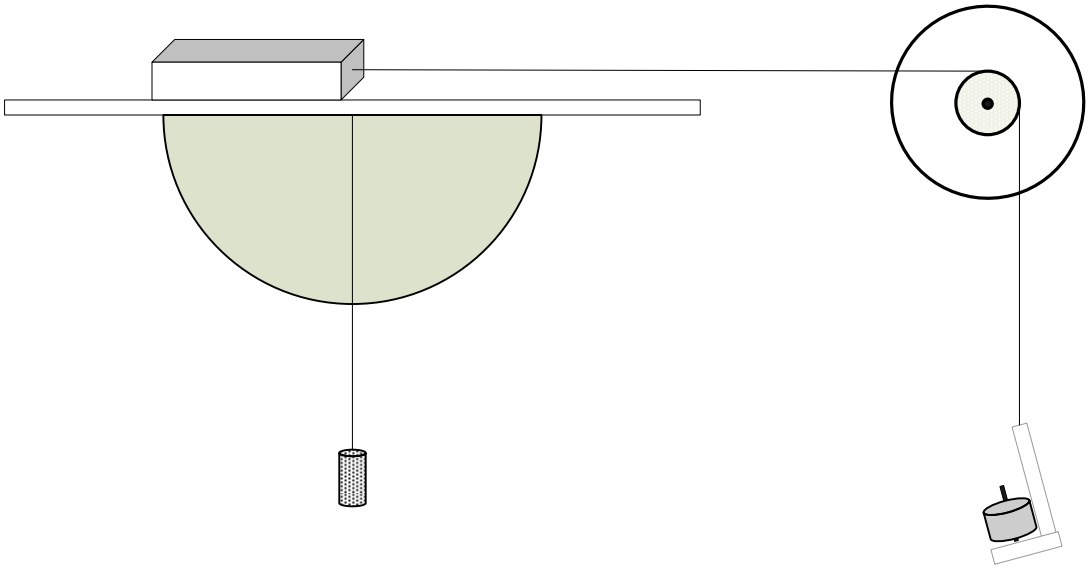

Figure 3: Friction block

3. Plot F_s as a function of F_n for three different sides of the block and calculate μ_s. Comment on the effects of the contact area and the smoothness of surface on the frictional force.
4. Now, remove the mass hanger from the equipment. Incline the plane until the block barely starts to move. Measuring the critical angle at which this happens calculate μ_s for all the three faces A, B and C of the friction block. Compare your results with those obtained from the graph in the previous step.

Remark:

Three variables can be varied while measuring F_s. They are:

normal force: You can increase the normal force between the block and the inclined plane by adding masses on top of the friction block.

hanging mass: You can increase the hanging mass in small increments by attaching paper clips to it.

contact material: Using faces A and B of the friction block, wood is the material in contact with the inclined plane. Using face C, only two strips of teflon contact the inclined plane.

contact area: You can adjust the area of contact by having face A,B or C of the friction block in contact with the inclined plane. Using face C, the contact area is the surface area of the two strips of teflon tape.

Name & Surname : **ID#:** **Section:**

Partner: **Total Grade:**

Data & Results: [20]

Table 1: Force measurement with spring balance

Hanged mass ( )	**Force ( )**	**Displacement ( )**

k=

Table 2: Friction properties of the surfaces using the hanging masses

Side A		**Side B**		**Side C**	
m_{block} ( )	m_{hung} ( )	m_{block} ( )	m_{hung} ( )	m_{block} ( )	m_{hung} ( )

μ_{sA}= μ_{sB}= μ_{sC}=

Table 3: Friction properties of the surfaces with inclination

θ_A= θ_B= θ_C=

μ_{sA}= μ_{sB}= μ_{sC}=

Name & Surname : **ID#:** **Section:**

Questions:

1) [2.5] Is it possible to use a spring which does not obey Hooke's law as a force gauge? If so, how?

2) [2.5] If you incline the plane so that the block starts to move do you expect it to slow down and stop? If so why? If not, what do you expect? How can you measure the kinetic friction coefficient using the inclined plane only?

3) [2.5] Show how to use a spring balance to weigh objects well beyond the maximum reading of the balance.

4) [2.5] In pushing a heavy box across the floor, you apply a horizontal force just sufficient to get the box moving. As the box starts to move, you continue to apply the same force. Show that the acceleration of the box, once it gets started, is $a = (\mu_s - \mu_k)g$

Name & Surname : **ID#:** **Section:**

Conclusion: [10]

Name & Surname : **ID#:** **Section:**

Plot 1: [10]

Name & Surname : ID#: Section:

Plot 2: [10]

Name & Surname : ID#: Section:

Plot 3: [10]

EXPERIMENT 3

CONSERVATION OF LINEAR MOMENTUM: COLLISIONS

Objective:

In this experiment collision types, their significances and the state of the momentum during the collisions will be examined

Introduction:

In many cases the laws of conservation of momentum and energy alone can be used to obtain important results concerning the properties of various mechanical processes. It should be noted that these properties are independent of the particular type of interaction between the particles involved. (One of the fundamental concepts in mechanics is that of a particle. By this we mean a body whose dimensions may be neglected in describing its motion. The possibility of doing so depends, of course, on the conditions of the problem concerned.)

The total momentum of a system of two bodies (or particles) has different values in different (inertial) frames of reference. If a frame S′ moves with velocity V relative to another frame S, then the velocities v'_n and v_n (n = 1,2) of the particles relative to the two frames are such that

$$v_1 = v_1^{'} + V \quad and \quad v_2 = v_2^{'} + V \qquad (1)$$

The total momenta of the particles P and P' in the two frames are therefore related by

$$P = (m_1 v_1 + m_2 v_2) = m_1 (v_1^{'} + V) + m_2 (v_2^{'} + V) \qquad (2)$$
$$= (m_1 v_1^{'} + m_2 v_2^{'}) + (m_1 + m_2) V$$

or

$$P = P' + (m_1 + m_2) V \qquad (3)$$

In particular, there is always a frame of reference *S′* in which the total momentum is zero. Putting P' = 0, we find the velocity of this frame:

$$V = \frac{m_1 v_1 + m_2 v_2}{m_1 + m_2} \qquad (4)$$

The right-hand side of the above equation can be written as the total time derivative of the expression

$$R = \frac{m_1 r_1 + m_2 r_2}{m_1 + m_2} \qquad (5)$$

where r_1 and r_2 denote the positions of the first and second particles, respectively. We can thus say that the velocity of the system as a whole is the rate of motion whose position vector is R. This point is called the *Centre of Mass* of the system.

The law of " Conservation of Momentum" can therefore be formulated as stating that

The centre of mass of the system moves uniformly in a straight line.

Collisions: When two bodies collide, the equal and opposite forces are internal forces in what is called a two-body system and consequently have no effect on the total momentum of the system. This phenomenon means that the sum of the momenta of the bodies before impact is equal to the sum of the momenta after impact. The relation between the kinetic energies before and after impact depends on the elasticity of the bodies.

A collision between two particles is said to be *elastic* if it involves no change in their internal state. Accordingly, when the law of conservation of energy is applied to such a collision, the internal energy of the particles may be neglected. In the case the kinetic energy is not conserved, the collision is said to be *inelastic.* The case in which the particles stick and go together as a rigid entity is referred to as a *completely inelastic collision.*

In this experiment, you are going to study elastic and inelastic collisions of two pucks on a frictionless plane (on an air table) by assuming that they behave as point particles.

Formally, from the law of conservation of momentum, one can write down two independent equations relating the initial and final speeds of the particles and the angles at which they get scattered. Yet, a third equation may follow from the conservation of energy if the collision turns out to be elastic. It is perfectly possible but however a little tedious to solve these equations for whatever quantities interest us. Therefore, we refrain ourselves from an elaborate algebraic analysis of these equations and be content only by the empirical verification of the law of conservation of linear momentum.

Questions to Think About:

1. If kinetic energy is not conserved during the collision where does it go?

2. A ball falls toward earth, its momentum increases. How would you reconcile this fact with the law of conservation of momentum?

Equipment:

The following equipment will be supplied.

- An air table

The following items must be brought by you and will not be supplied.

- A ruler
- A scientific calculator

Procedure:

PART A:

1. Level the air table using the set screws beneath.
2. Activate the air pump and the spark timer and project two ordinary (non-magnetic) pucks towards one another so that they collide at some place at the centre of the air table, and thereafter follow different straight paths. (See Figure 1) as you need to turn over the paper to see the printed paths, be careful not to mix the right and left hand sides.

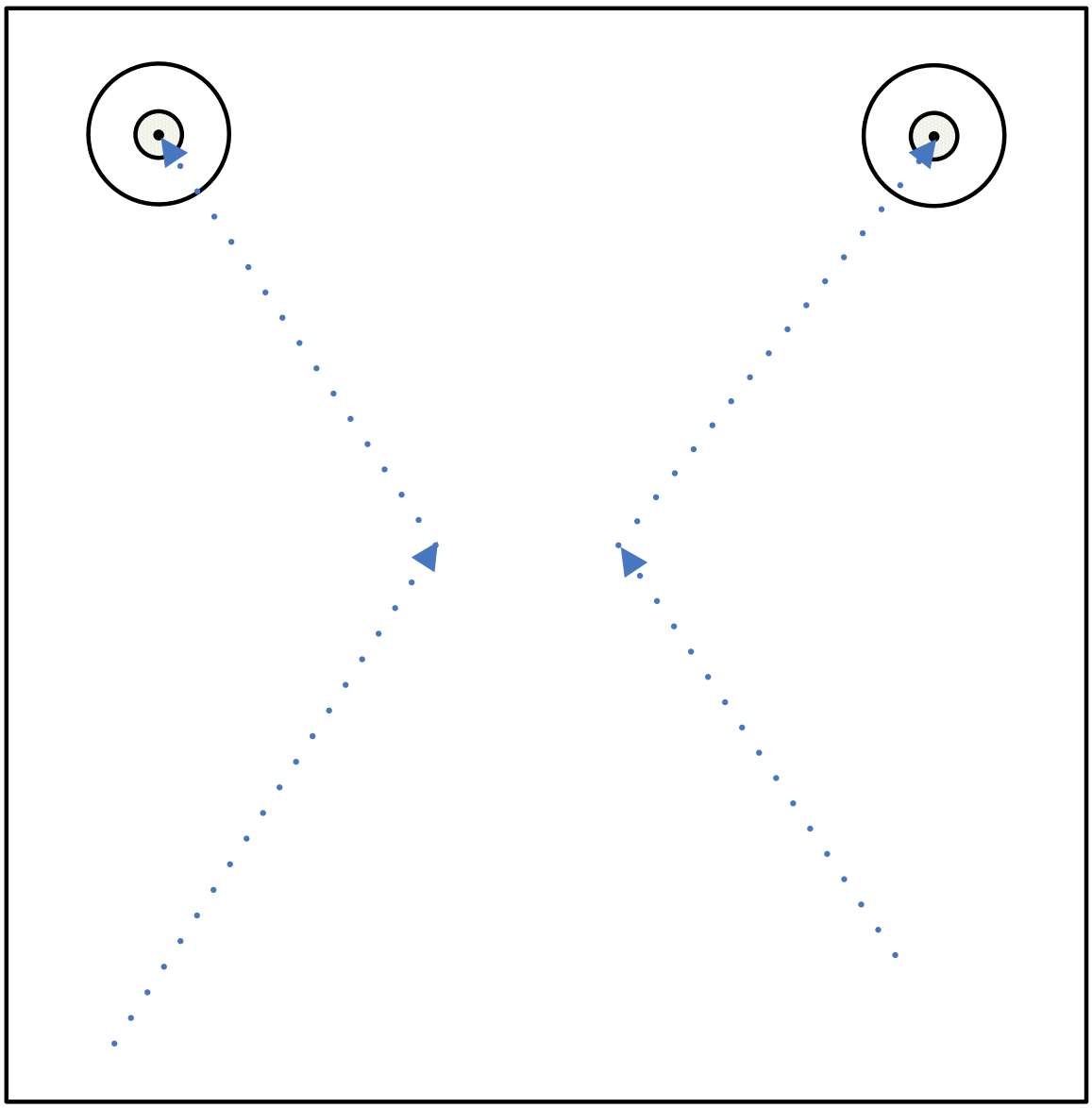

Figure 1: Collision with steel pucks

3. By pairing the black prints on the paper, locate the successive positions of the centre of mass before and after the collision. Measure the distances before and after the collisions having the collision point set as the origin and tabulate your data in Table 1. Verify that the centre of mass of the system moves uniformly in a straight line during the complete process, i.e. show that the centre of mass velocity remains invariant during the collision (and hence, the momentum is conserved).
4. Attach velcro tapes around the pucks and repeat steps 2-3. The pucks will stick to each other and move together after the collision. (Be sure that the pucks do not contact each other at the sealing points of the velcro tapes and that they do not rotate after sticking.) Use Table 2 for your data

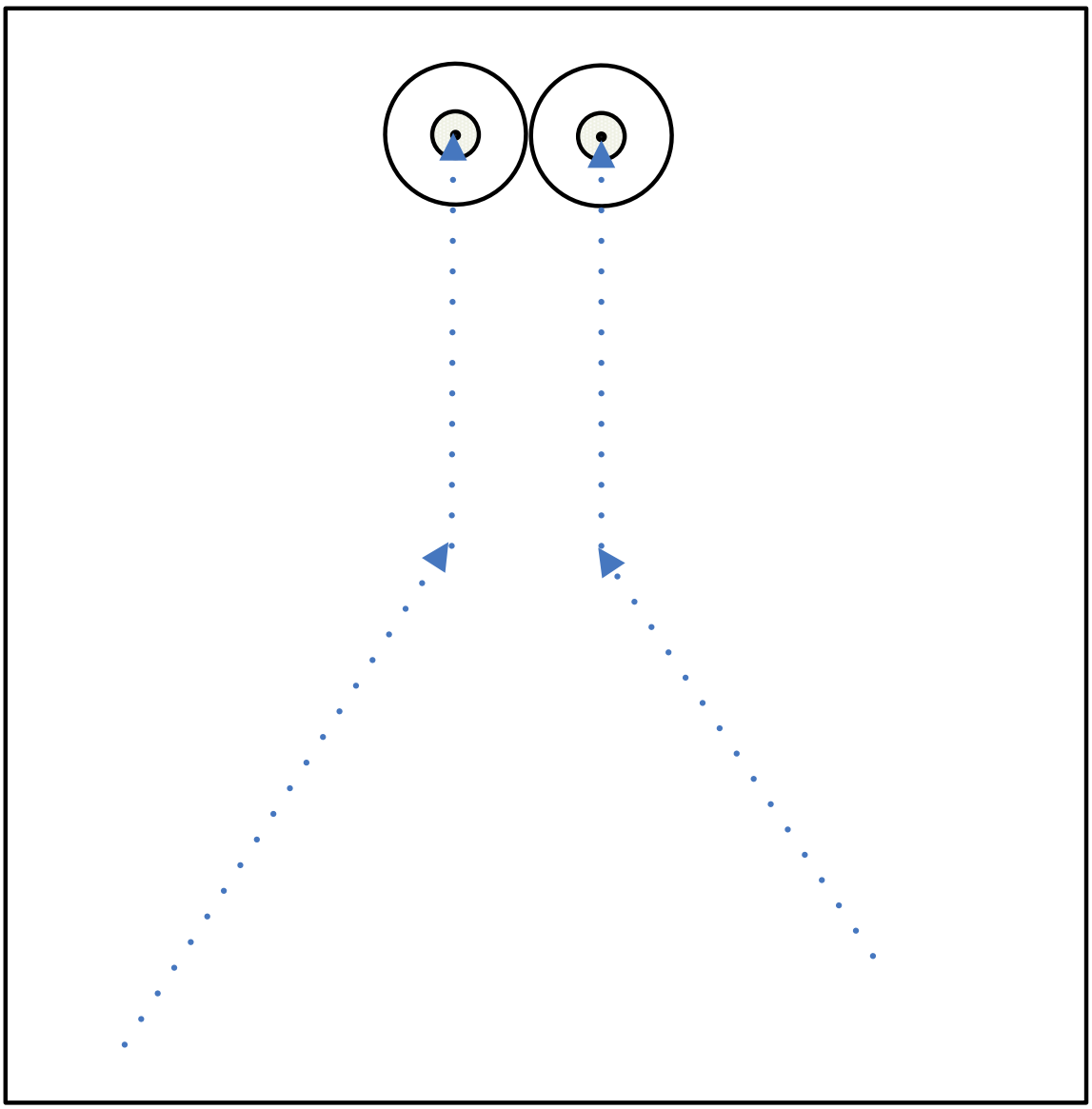

Figure 2: Collision with velcro tapes attached steel pucks

5. Replace the ordinary pucks with the magnetic pucks. After having activated the air pump and the spark timer, project them towards one another at reasonably slow velocities so that they get scattered essentially by the repulsive magnetic interaction rather than by actually colliding. Thereafter, repeat steps 3 and 4. Fill Table 3.

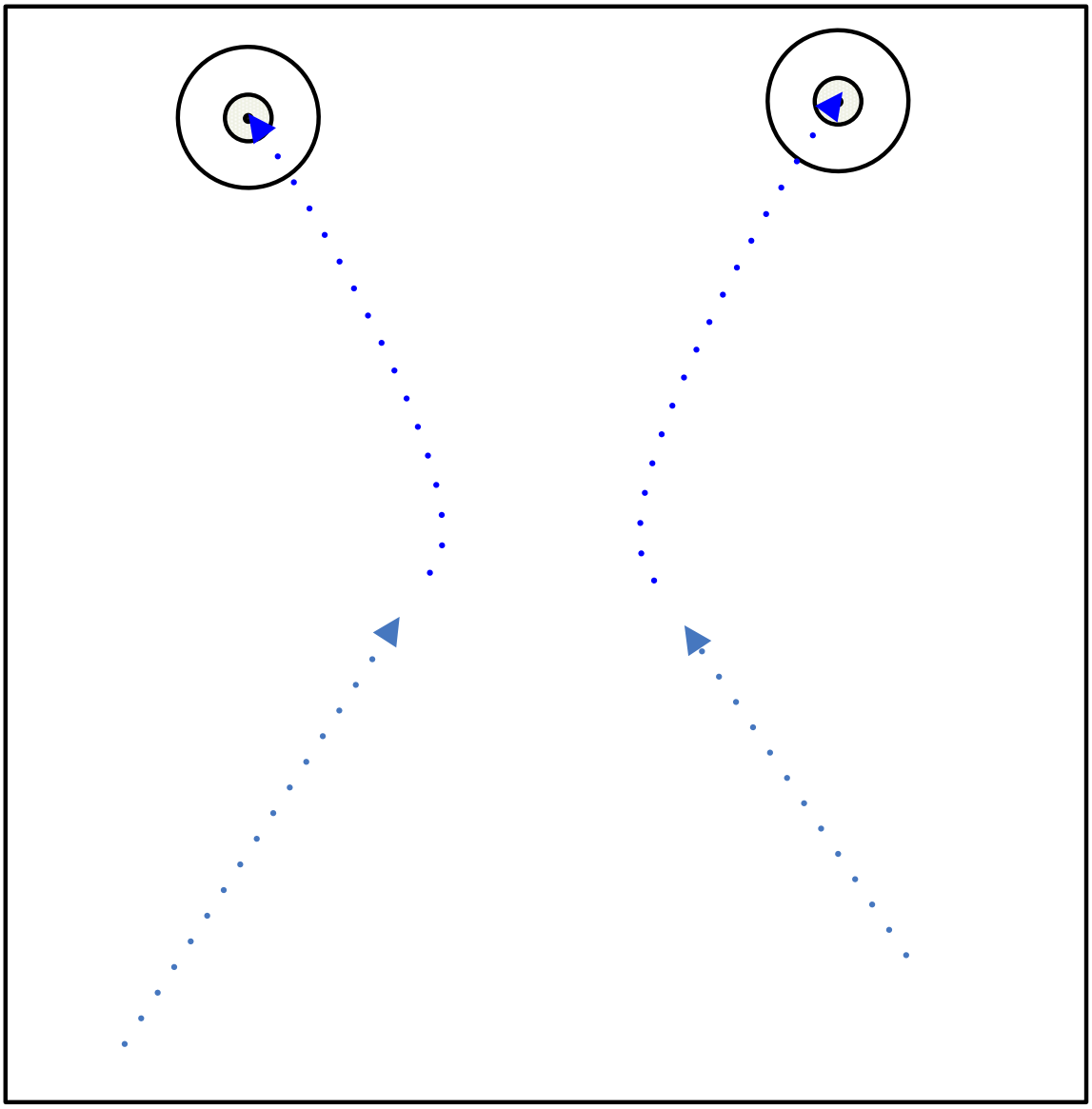

Figure 3: Collision with magnetic pucks

Name & Surname : ID#: Section:

Partner: Total Grade:

Data & Results: [45]

Table 1a: Collision with two steel disks (center of mass)

Center of Mass

	Before the Collision			After the Collision		
	ΔR ( )	Δt ( )	V_{cm} ( )	ΔR ( )	Δt ( )	V_{cm} ( )
1						
2						
3						
4						

Table 1b: Collision with two steel disks before the collision

Before Collision

	Left Puck			Right Puck		
	ΔR ( )	Δt ( )	V ( )	ΔR ( )	Δt ( )	V ( )
1						
2						
3						
4						

$V_{avg\ left}$= _____ $V_{avg\ right}$= _____

E_{left}= _____ E_{right}= _____

$E_{initial}$= E_{left}+ E_{right}= _____

Name & Surname : **ID#:** **Section:**

Table 1c: Collision with two steel disks after the collision

After Collision

	Left Puck			Right Puck		
	ΔR ( )	**Δt ( )**	**V ( )**	**ΔR ( )**	**Δt ( )**	**V ( )**
1						
2						
3						
4						

$V_{avg\ left}$= **$V_{avg\ right}$=**

E_{left}= **E_{right}=**

E_{final}= E_{left}+ E_{right}=

E_{final} / $E_{initial}$ = **Energy Loss % =**

Table 2a: Collision with two steel disks & Velcro (center of mass)

Center of Mass

	Before the Collision			After the Collision		
	ΔR ( )	**Δt ( )**	**V_{cm} ( )**	**ΔR ( )**	**Δt ( )**	**V_{cm} ( )**
1						
2						
3						
4						

Table 2b: Collision with two steel disks & Velcro before the collision

Before Collision

	Left Puck			Right Puck		
	ΔR ( )	**Δt ( )**	**V ( )**	**ΔR ( )**	**Δt ( )**	**V ( )**
1						
2						
3						
4						

Name & Surname : ID#: Section:

$V_{avg\ left}$= $V_{avg\ right}$=

E_{left}= E_{right}=

$E_{initial}$= E_{left}+ E_{right}=

Table 2c: Collision with two steel disks& velcro after the collision

After Collision

	Left Puck			Right Puck		
	ΔR ( )	Δt ( )	V ( )	ΔR ( )	Δt ( )	V ( )
1						
2						
3						
4						

$V_{avg\ left}$= $V_{avg\ right}$=

E_{left}= E_{right}=

E_{final}= E_{left}+ E_{right}=

E_{final} / $E_{initial}$ = Energy Loss % =

Table 3a: Collision with two magnetic disks (center of mass)

Center of Mass

	Before the Collision			After the Collision		
	ΔR ( )	Δt ( )	V_{cm} ( )	ΔR ( )	Δt ( )	V_{cm} ( )
1						
2						
3						
4						

Name & Surname : ID#: Section:

Table 3b: Collision with two magnetic disks before the collision

Before Collision

	Left Puck			Right Puck		
	ΔR ( )	Δt ( )	V ( )	ΔR ( )	Δt ( )	V ( )
1						
2						
3						
4						

$V_{avg\ left}$= **$V_{avg\ right}$=**

E_{left}= **E_{right}=**

$E_{initial}$= E_{left}+ E_{right}=

Table 3c: Collision with two magnetic disks after the collision

After Collision

	Left Puck			Right Puck		
	ΔR ( )	Δt ( )	V ( )	ΔR ( )	Δt ( )	V ( )
1						
2						
3						
4						

$V_{avg\ left}$= **$V_{avg\ right}$=**

E_{left}= **E_{right}=**

E_{final}= E_{left}+ E_{right}=

E_{final} / $E_{initial}$ = **Energy Loss % =**

Name & Surname : ID#: Section:

Questions:

1) [5] If you are given a data sheet with only spark timer prints on it, can you distinguish between the initial and final states of the pucks?

2) [5] A particle collides obliquely with an identical particle initialy at rest. Assuming elastic collision, show that the two particles move at 90° from each other after the collision.

Conclusion: [15]

----- This page is intentionally left blank -----

EXPERIMENT 4

ANGULAR VELOCITY AND ACCELERATION

Objective:

In this experiment basic relations of rotational dynamics will be studied

Introduction:

In linear dynamics Newton's second law (F = ma) describes the relationship between force, mass and acceleration for an idealized point particle. No real object is a point particle, but this idealized relationship can be extended to real objects by defining a point called the centre of mass of the object. Using this concept, a more generalized version of Newton's second law still holds. F is then taken as the vector sum of all external forces acting on the object, m is the mass of the object, and a is the acceleration of the centre of mass.

However, an object can move while its centre of mass remains stationary. In this experiment you will begin to study the simplest and most important motion of this type: rotation about a fixed axis through the centre of mass of the object. This is an important kind of motion because any kind of motion of a rigid body can be described as a combination of the motion of the centre of mass, and rotation about its centre of mass.

In rotational motion, the equation defining the average angular acceleration is analogous to what you have in linear motion, with angular velocity (ω) and angular acceleration (α) replacing the corresponding linear variables:

$$\alpha_{avg} = \frac{\omega_f - \omega_i}{t_f - t_i} \qquad (1)$$

in which ω_f and ω_i are the final and initial angular velocities, and t_f and t_i are the corresponding times.

Newton's second law (F = ma) relates the force, mass, and acceleration in linear motion. Fortunately, for those who don't enjoy memorizing equations, the law of motion for rotation about a fixed axis is analogous: $\tau = I\alpha$. A force is the thing that is needed to make linear motion, and the thing that makes something rotate is a force-like quantity (τ), called the torque, and bears the same relationship to rotation as force does to linear movement. Correspondingly, the rotational analog of the mass is a mass-like quantity (I), called the moment of inertia, and is regarded as a measure of the rotational inertia of a body against an external torque. In this section, you will

investigate this analogy through experiment, and verify the linear relationship between torque and angular acceleration.

Of course, the rotational version represents a somewhat more complicated relationship than F = ma, because torque and moment of inertia are more complicated variables than force and mass. If you are not familiar with the concepts of torque and moment of inertia, the only thing that you should know for the present is that the torque applied by a force acting tangentially on the rim of disk (rotating about its center of mass) is given as the product of the force and the radius of the disk.

Questions to Think About:

1. A lever is a device that consists of a long plank which rests on a fulcrum (or pivot point). A lever can be used to lift a heavy object with a force smaller than the object's weight. Explain how this is possible by using the definition of torque (and the concept of rotational equilibrium).
2. A student is trying to solve a physics problem by drawing a force diagram (or a free-body diagram) for an object that is moving in a circular path. He decides to draw all the forces acting on the object, including the centripetal force, and then he applies Newton's 2nd law, i.e., he vectorially adds up all the forces (including the centripetal force) and sets this sum equal to the object's mass times its acceleration. Is there anything wrong with his approach? Explain.

Equipment:

The following equipment will be supplied at the laboratory.

- Rotation dynamics setup

The following items must be brought by you and will not be supplied at the laboratory.

- A ruler
- A scientific calculator

Procedure:

1. To ensure that the disk rotates with uniform velocity or acceleration, even with an eccentric load, the base must be accurately leveled. Using the bubble level, adjust the three leveling feet until the base is level.
2. Plug in the AC adapter to that the digital display comes on, and flip the switch on the display to UPPER, so that the top disk is monitored by the optical readers. If you have any questions about setting up the equipment, see Appendix B
3. Use the steel disk as the top disk and use the small torque pulley.

4. Attach the mass hanger (with a 20 gm mass) to the end of the thread. With the thread extended, the mass should almost reach the floor.
5. Check the valve p*in* for the lower disk is in the storage position, so that the lower disk rests firmly on the base plate; only the top disk should spin for this part of the experiment.
6. Record the mass (M) of the rotating disk(s), the radius of the torque pulley (r), and the hanging mass (m) in Table 1. Be sure to include the mass of the hanger (5 g) in your value for m.
7. To measure the acceleration of the disk under the force applied by the hanging mass wind the thread onto the torque pulley, until the hanging mass is almost against the air pulley. Hold the disk until the display reads zero. Then release the disk. As the disk rotates, record at least three successive, non-zero readings (R_1, R_2, R_3, ...) of the display, and record them in Table 1. The first of your recorded values (i.e., #1) will not be usable data. Leave this value in your data table, but do not use it in your later calculations. For a detailed explanation of why you must ignore the first reading, refer to Appendix B.
8. Repeat step 7 once more
9. Leaving all other experimental conditions the same, change the value of m, and repeat steps 7 and 8. Do this for three more different values of m and tabulate your data in the Table 1b, 1c and 1d.
10. For each trial of the experiment for a specified value of m, calculate: the angular velocity ($\omega=\kappa R$) within each counting interval, and the average angular acceleration ($\alpha=\Delta\omega/\Delta t$) within each valid time interval, and record these values in Table 1. See Remarks 1&2 for the details of the calculation
11. For each set of trials with different m values determine the arithmetic mean of your calculated values of α and record it in Table 1e. Also, calculate the torque τ applied by the hanging mass and record the corresponding value in the third column.
12. Now pull the valve pin from the center of the upper disk. This will make two steel disk rotating together. Repeat the procedures for items 6-11 and record the related values in Table 2.
13. Change the upper disk to aluminum and repeat the same procedures, tabulate your data in Table 3.
14. Having generated the data for m and α plot the graph of α vs. m for all three configurations on a single graph
15. Plot τ vs. α graph for all configurations on a single graph.
16. Calculate the moment of inertias of the systems from the slope of the torque vs. angular acceleration graphs. Compare them with their theoretical values.

Remark 1: Measuring the angular velocity

It should be noted that the digital display shows only the number of black bars (around the edge of the disk) that pass the optical detector each second. You can use the following information to relate the reading on the display to the angular velocity of the rotating disk.

The number (N) of black bars around the edge of either disk (steel or aluminum) is 200. Dividing 2π by 200 we can determine the rotation of the disk in radians for each bar detected by the optical reader. This value (κ) is the proportionality factor between the display reading (R) and the angular velocity (ω), i.e.,

$$\omega = \kappa R.$$

Convince yourself of this by comparing the units of the relevant variables:
R (bars/sec), ω(rad/sec), N(bars),2π (rad).
Notice that $(2\pi/N)(R) = \omega$ gives the proper units.

Remark 2: Calculating the angular acceleration

The display shows you the number of bars that pass by every second. However, there is a dead time of one second between each counting interval, so that the time between successive displayed values is 2 seconds. Therefore if you convert all your display readings into angular velocities, you can use the equation: $\alpha=\Delta\omega/\Delta t$ to calculate the average angular acceleration within each timing interval. Thus,

calculate a as $\alpha=\dfrac{\omega_3-\omega_2}{t_3-t_2}$ where $t_3 - t_2 = 2.0$ seconds, and ω is determined using the conversion factor κ, i.e. $\omega=\kappa R$.

Name & Surname : **ID#:** **Section:**

Partner: **Total Grade:**

Data & Results: [30]

ONE STEEL DISK

Mass of the disk= _____ radius of the torque pulley r= _____

Table 1a: Measurement with single steel disk

m =	1st Trial	2nd Trial
R_1		
ω_1		
R_2		
ω_2		
R_3		
ω_3		
α		

Table 1b: Measurement with single steel disk

m =	1st Trial	2nd Trial
R_1		
ω_1		
R_2		
ω_2		
R_3		
ω_3		
α		

Table 1c: Measurement with single steel disk

m =	1st Trial	2nd Trial
R_1		
ω_1		
R_2		
ω_2		
R_3		
ω_3		
α		

Table 1d: Measurement with single steel disk

m =	1st Trial	2nd Trial
R_1		
ω_1		
R_2		
ω_2		
R_3		
ω_3		
α		

Table 1e: torque and angular acceleration with single steel disk

m ( )	α ( )	τ ( )

TWO STEEL DISKS

Mass of the disks= radius of the torkque pulley r=

Table 2a: Measurement with two steel disks

m =	1st Trial	2nd Trial
R_1		
ω_1		
R_2		
ω_2		
R_3		
ω_3		
α		

Table 2b: Measurement with two steel disks

m =	1st Trial	2nd Trial
R_1		
ω_1		
R_2		
ω_2		
R_3		
ω_3		
α		

Table 2c: Measurement with two steel disks

m =	1st Trial	2nd Trial
R_1		
ω_1		
R_2		
ω_2		
R_3		
ω_3		
α		

Table 2d: Measurement with two steel disks

m =	1st Trial	2nd Trial
R_1		
ω_1		
R_2		
ω_2		
R_3		
ω_3		
α		

Table 2e: torque and angular acceleration with two steel disks

m ( )	α ( )	τ ( )

ONE ALUMINUM DISK

Mass of the disk= radius of the torkque pulley r=

Table 3a: Measurement with aluminum disk

m=	1st Trial	2nd Trial
R_1		
ω_1		
R_2		
ω_2		
R_3		
ω_3		
α		

Table 3b: Measurement with aluminum disk

m=	1st Trial	2nd Trial
R_1		
ω_1		
R_2		
ω_2		
R_3		
ω_3		
α		

Name & Surname : **ID#:** **Section:**

Table 3c: Measurement with aluminum disk

m =	1st Trial	2nd Trial
R_1		
ω_1		
R_2		
ω_2		
R_3		
ω_3		
α		

Table 3d: Measurement with aluminum disk

m =	1st Trial	2nd Trial
R_1		
ω_1		
R_2		
ω_2		
R_3		
ω_3		
α		

Table 3e: torque and angular acceleration with aluminum disk

m ( )	α ( )	τ ( )

I_S (theoretical) = _____ I_S (experimental) = _____ % Error = _____

I_{SS} (theoretical) = _____ I_{SS} (experimental) = _____ % Error = _____

I_A (theoretical) = _____ I_A (experimental) = _____ % Error = _____

Name & Surname : **ID#:** **Section:**

Questions:

1) [2.5] Is it reasonable to assume that your measured values of α are the same as the instantaneous angular acceleration within each counting interval? Explain your answer. (Hint: Is the angular acceleration constant?)

2) [2.5] How do I_S, I_{SS} and I_A compare with one another?

3) [2.5] Could the angular quantities θ, ω and α be expressed in terms of degrees instead of radians in the kinematical equations?

4) [2.5] Is α proportional to m?

Conclusion: [10]

Name & Surname : **ID#:** **Section:**

Plot 1: [10]

Name & Surname : ID#: Section:

Plot 2: [10]

----- This page is intentionally left blank -----

EXPERIMENT 5

ENERGY CONSIDERATIONS IN ROTATION

Objective:

Energy and its conservation in rotational motion will be examined.

Introduction:

An object of mass m, moving in a straight line, has kinetic energy equal to $mv^2/2$, and gravitational potential energy equal to mgh. An object rotating about a fixed axis has rotational kinetic energy equal to $I\omega^2/2$. In this experiment you will use a hanging mass to exert a constant torque on a spinning disk, and determine whether the energy gained by the rotating disk is equal to the energy lost by the hanging mass.

The complete equation for conservation of energy in this situation is

$$\frac{1}{2}m\upsilon_i^2 + mgh_i + \frac{1}{2}I\omega_i^2 = \frac{1}{2}m\upsilon_f^2 + mgh_f + \frac{1}{2}I\omega_f^2 \qquad (1)$$

where the subscripts i and f refer to the measurements taken at two different instants in time. In this experiment, you will need to make the necessary measurements to account for all the variables in this equation, and then determine if energy is actually conserved.

Questions to Think About:

1. The potential energy of an object at a height h is given as mgh. When the object is released where does all of this energy go? Keep in mind that energy can take on several forms.
2. Instead of lifting a box directly onto the back of a truck, someone uses a long frictionless ramp and slides the box up the ramp onto the back of the truck. Do these two methods of loading the box onto the back of a truck require the same amount of work and force? Explain.

Equipment:

The following equipment will be supplied.

- A rotation dynamics setup
- A 100 cm ruler

The following items must be brought by you and will not be supplied at the laboratory

- A scientific calculator

Procedure:

1. Set up the equipment as shown in Figure 1. Use the steel disk as the top disk, and use the small torque pulley. Check that the bottom disk sits firmly on the base plate (only the top disk should spin)

2. Attach the mass hanger (with a 20 gm mass) to the end of the thread. With the thread extended, the mass should almost reach the floor.

3. Set the display switch so that the display monitors the motion of the upper disk. Wind the thread onto the torque pulley, until the hanging mass is almost against the air pulley. Hold the disk until the display reads zero.

4. You will need to record the hanging mass (m) and to calculate the moment of inertia, I, of the rotating disk. You can determine I theoretically, using the equation for the moment of inertia of a disk. Make this calculation and fill the reserved location.
5. You will need to measure the angular velocity of the rotating disk, and at the same instant, measure the height and the linear velocity of the hanging mass. In order to test the conservation of energy you will need to make these measurements for at least two different instants in time. Read the hints for the details.

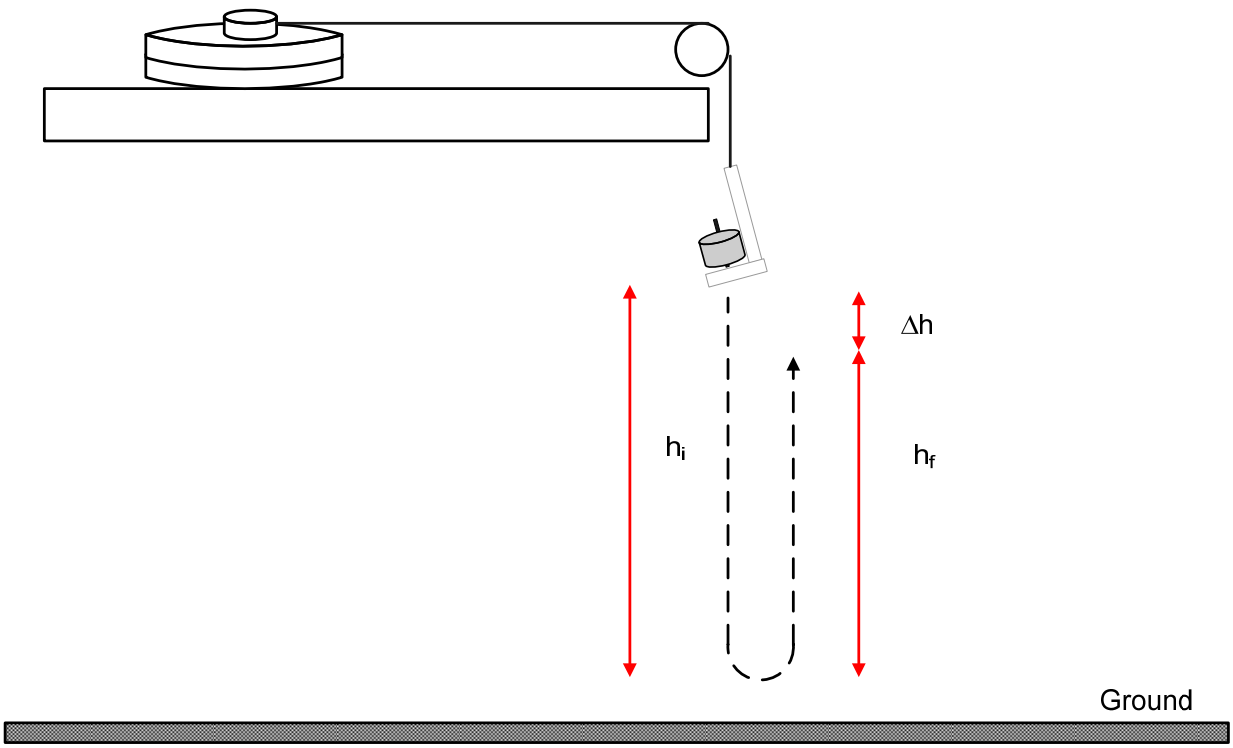

Figure 1: Motion of the mass hanger

6. Measure h_i, the height of the hanging mass from the floor. In this position, before you release the hanging mass, ω; and v equal zero. Therefore, the total energy is just the gravitational potential energy of the mass: mgh_i
7. Now let go of the mass falls and the disk rotates. Record two values R_1 & R_2, the last two display reading that occurs before the thread fully unwinds from the torque pulley and start to wind back in upward direction.
8. There will inevitably be some delay between the time when R first comes on the display and the measurement of h. Try to estimate how long that delay is. Observe the delay time as t_{error} and take it into account in your analysis.
9. Some energy will be lost to friction. You can estimate this value by seeing how high the hanging mass rises back up. The loss in gravitational potential energy ($mg\Delta h$) gives you an indication of how much energy is lost to friction. Include this in your result as well.

Hints: The linear velocity of the falling mass is related to the angular velocity of the rotating disk by the equation: $v = \omega r$, where r is the radius of the torque pulley. Therefore once you have measured ω, a simple calculation will give you v.

The angular velocity ω must be measured at any instant in time, whereas the optical readers simply record the number of bars that pass by in one second. The resulting value of ω is therefore only an average value over a period of one second. Suppose instantaneous measurements of ω were made at two instants, ω_1 at the beginning of the one second timing period; and ω_2 at the end of the same period. The average rotational acceleration over the same time interval is given by

$$\alpha_{avg} = \alpha = \frac{\omega_2 - \omega_1}{t\ (2\ \text{sec})}$$

Note that since the torque is constant the acceleration is also constant and $\alpha_{avg} = \alpha$.On the other hand

$$\omega_{avg} = \frac{1}{2}(\omega_1 + \omega_2)$$

Eliminating ω_1 from these two equations:

$$\omega_f = \omega_{avg} + \frac{1}{2}\alpha t\ (1\ \text{sec})$$

Therefore, to measure the instantaneous velocity at the end of a one second timing period, just measure ω_{avg} and α, and use the above equation. Note that, the display is always updated at the end of a timing period.

----- This page is intentionally left blank -----

Name & Surname :	ID#:	Section:
Partner:	Total Grade:	

Data & Results: [40]

Table 1: Energy in rotational motion

	1st Trial	2nd Trial	3rd Trial
	m =	m =	m =
h_i			
$E_i = mgh_i$			
R_1			
R_2			
ω_1			
ω_2			
α			
ω_f			
v_f			
$KE_{rotation} = 1/2(I\omega_f^2)$			
$KE_{linear} = 1/2(mv_f^2)$			
$E_{loss} = mg\Delta h$			
$E_{final} = E_{loss} + KE_{total}$			
Δh			
% error			

$I_{Steel\ Disk} = (M/2)(r_{inner}^2 + r_{outer}^2) =$ _____

Questions:

1) [5] The kinetic energy K of a body of mass m can be written in terms of its momentum p in the form: $K = p^2/2m$. Find the analogous relation between rotational kinetic energy and angular momentum.

_____

_____

_____

_____

_____

2) [5] A solid disk of mass m is rolling along a surface. Its centre has velocity v. What is the kinetic energy of the disk?

Name & Surname : **ID#:** **Section:**

3) [5] A solid disk and a solid sphere, each of the same mass, are rolling along a surface. They have equal kinetic energies. Which one is faster? Explain

Conclusion: [15]

EXPERIMENT 6

THE TORSIONAL OSCILLATOR

Objective:

In this experiment periodic oscillatory behavior of a rotating body will be studied

Introduction:

Examples of oscillatory or periodic motion are familiar to everyone. For all systems oscillating or vibrating about an average position, we find that the displacement of the moving part from its equilibrium value has the same simple time dependence (called harmonic oscillation),

$$x(t)=A\cos\omega t+B\sin\omega t \qquad (1)$$

where ω is referred to as the oscillation frequency, and A and B are constants that depend on the initial conditions of the motion. Differentiating x(t) with respect to time twice, one readily notes that the acceleration (and hence, the force) is proportional to the displacement, i.e.

$$a=\frac{d^2x}{dt^2}=-\omega^2 x \qquad (2)$$

Multiplying both sides of this equation by v, and noting that $dv^2/dt = 2va$ and $dx^2/dt = 2xv$, we can conform it to an alternative form:

$$\frac{d}{dt}\left(\frac{1}{2}\upsilon^2\right)=-\omega^2\frac{d}{dt}\left(\frac{1}{2}x^2\right) \qquad (3)$$

$$\frac{d}{dt}\left(\frac{1}{2}m\upsilon^2+\frac{1}{2}kx^2\right)=0 \qquad (4)$$

where we have put $\omega^2 = k/m$ for a mass-spring system, for instance. We at once note that the quantity

$$\varepsilon=\frac{1}{2}m\upsilon^2+\frac{1}{2}kx^2 \qquad (5)$$

is to be recognized as the total energy of the oscillator, and clearly, is a constant of motion since its time derivative is zero.

As you might expect, there is a rotational analog to linear harmonic motion. The same equations apply, except that torque replaces force, angular displacement replaces linear displacement and moment of inertia replaces mass. The rotational kinetic energy of a disk (acted on by a spiral coil: a torsion spring), for instance, is analogously given by $KE=(1/2)/I\omega^2$, and the potential energy stored in the spring, clearly, should be a function of the angular displacement, ν, i.e. $PE=U(\nu)$. Performing a Taylor series expansion of the potential energy about the equilibrium point ($\nu = 0$), we write

$$U(\upsilon) = \upsilon \frac{dU}{d\upsilon}\Big|_{\upsilon=0} + \frac{1}{2}\upsilon^2 \frac{d^2U}{d\upsilon^2}\Big|_{\upsilon=0} + \text{higher order terms} \qquad (6)$$

in which we have set $U(\nu= 0) = 0$ as the reference energy level for simplicity (We could have assigned it any value!). Furthermore, we also set $\frac{dU}{d\upsilon}\Big|_{\upsilon=0}=0$, since at the equilibrium point (about which the system rotates back and forth), U is a minimum. Moreover, if we confine our attention to angular displacements that are sufficiently small, we can neglect all terms involving ν^3 and higher powers of ν. We therefore have the approximate expression for the potential energy:

$$U(\upsilon) = \frac{1}{2}\kappa\upsilon^2 \qquad (7)$$

in which

$$\kappa = \frac{d^2U}{d\upsilon^2}\Big|\upsilon=0 \qquad (8)$$

is a constant that depends on the geometry and the material properties of the torsion spring (spring that resists twisting or rotating and having a strong tendency to return to its original position when twisted.) and is called the tensional constant.

In this experiment, you will investigate the oscillatory behavior of a disk swinging about its axis under the influence of a torsional coil (spring). Making correspondence with the simpler case of a mass on a spring system, one can easily verify that the angular frequency and the period of oscillation for the torsional disk are given by

$$\omega=\sqrt{\frac{\kappa}{I}} \qquad (8)$$

$$T=2\pi\sqrt{\frac{I}{\kappa}} \qquad (9)$$

Questions to Think About:

1. How does the period of the spring-mass system depend on the spring constant? Doubling the spring constant will change the period of oscillations by what factor? Think about the same question for the torsion spring.

Equipment:

The following equipment will be supplied.

- A rotation dynamics setup
- A stopwatch

The following items must be brought by you and will not be supplied at the laboratory

- A protractor
- A scientific calculator

Procedure:

1. Set up the equipment for a constant torque experiment. Use the aluminum top disk and the small torque pulley. Make sure that both Valve Pins are in the storage position, so that the bottom disk sits firmly on the base plate.
2. Connect the torsion spring to the top disk as follows; use a black thumb-screw to attach the non-coil end of the torsion spring to the support for the air bearing, and attach the coiled end of the spring to the torque pulley by fitting the tip of the spring into the slot in the pulley.
3. Wrap the thread a few times around the pulley. If the spring is pushed to the bottom part of the groove in the pulley, there is room for a few coils of thread around the upper part of the pulley.
4. Let the disk come to equilibrium, once with the hanging mass on the table, so no torque is exerted on the disk, and once with the hanging mass hanging. Each time, let the disk come to rest at its equilibrium position, then mark the position of the disk. Measure the angular displacement between the two disk positions and record your measurement in Table 1.
5. Now give the disk a half turn and release it. Use a stopwatch to determine the period of oscillation of the disk. It is best to measure the time for many oscillations, say twenty, then divide by the total number of oscillations to find the period. Determine the period with and without the hanging mass exerting a torque on the disk.
6. Repeat your measurements for different hanging masses.
7. Calculate the moment of inertia of the disk.
8. Calculate the torque exerted by the hanging masses.

9. To determine the torsional constant, κ, of the torsion spring, divide the torque exerted by the hanging mass by the angular displacement of the disk when the torque was applied.
10. Based on your value of κ, and the moment of inertia of each disk, what should be the frequency and the period of oscillation for each disk? Compare your results with those you have measured using a stopwatch.
11. Using the steel disk as the top disk go through all the steps and tabulate your data in Table 2.

Name & Surname : **ID#:** **Section:**

Partner: **Total Grade:**

Data & Results: [45]

Table 1: Aluminum Disk

m ( )	θ ( )	τ ( )	κ ( )	T_{calc} ( )	T_{exp} ( )

$I_{Disk} = M/2(r_{inner}^2 + r_{outer}^2) =$ _____

Table 2: Steel Disk

m ( )	θ ( )	τ ( )	κ ( )	T_{calc} ( )	T_{exp} ( )

$I_{Disk} = M/2(r_{inner}^2 + r_{outer}^2) =$ _____

Questions:

Q1) [5] Was the frequency of the oscillation affected by whether the hanging mass was exerting a torque on the rotating disk? Why or why not?

_____

_____

_____

_____

_____

Q2) [5] A horizontal metal plate executes simple harmonic motion up and down. Under what circumstances will a small metal object put on the plate begin to rattle?

_____

_____

_____

_____

Name & Surname : ID#: Section:

Conclusion: [15]

APPENDICES

Appendix A: UNITS, CONSTANTS & SYMBOLS
Appendix B: PASCO - ROTATIONAL DYNAMICS APPARATUS
Appendix C: ANALYSIS OF RANDOM ERRORS IN MEASUREMENTS
Appendix D: METHOD OF LAST SQUARES IN CURVE FITTING
Appendix E: PROBABILITY DISTRIBUTIONS
Appendix F : NUMERICAL INTERPOLATION
Appendix G : NUMERICAL SOLUTIONS OF ROOT EQUATIONS
Appendix H : ELEMENTARY ANALYTICAL METHODS
Appendix I : TRIGONOMETRIC FUNCTIONS
Appendix J : HYPERBOLIC FUNCTIONS
Appendix K: THE EXPONENTIAL FUNCTION
Appendix L : THE PROBABILITY INTEGRAL $\Phi(x)$
Appendix M : THE BINOMIAL COEFFICIENTS: PROPERTIES & VALUES

Appendix A: UNITS, CONSTANTS & SYMBOLS

UNITS AND CONSTANTS

Powers of ten	*Prefix*	*Abbreviation*
10^{12}	tera	T
10^{9}	giga	G
10^{6}	mega	M
10^{3}	kilo	k
10^{-2}	centi	c
10^{-3}	mili	m
10^{-6}	micro	m
10^{-9}	nano	n
10-^{12}	pico	p

UNITS

Physical quantity	*MKS Unit*	*CGS (Gaussian) Unit*
length	Meter (m)	centimeter (cm)=10^{-2} m
mass	Kilogram (kg)	gram (g) = 10^{-3} kg
time	Second (s)	second (s)
force	Newton (N)	dyne = 10^{-5} N
energy	Joule (J) = Nm	erg = 10^{-7} J
power	Watt (W)	erg/sec = 10^{-7} W
electric charge	Coulomb (C)	statcoulomb = (10^{-9}/2.998)C
electric potential	Volt (V) = J/C	
electric current	Ampere (A)	
electric field	Volt/meter or Newton/coulomb	
magnetic field	Weber/meter^2 (Wb/m^2)	gauss = 10-4 Wb/m^2
resistance	Ohm (Ω) = volt/ampere	
capacitance	Farad (F) = coulomb/volt	
inductance	Henry (H) = volt-sec/ampere)	

FUNDAMENTAL PHYSICAL CONSTANTS

Name	*Symbol*	*Value*
Speed of light	C	2.998×10^{8} m/sec
Charge of electron	*e*	1.602×10^{-19} coul
Mass of electron	m_e	9.109×10^{-31} kg
Mass of neutron	m_n	1.675×10^{-27} kg
Mass of proton	m_p	1.672×10^{-27} kg
Planck's constant	*h*	6.626×10^{-34} joule-sec
	$h/2\pi$	1.054×10^{-34} joule-sec
Permittivity of free space	ε_0	8.854×10^{-12} farad/m
	$1/4\pi\varepsilon_0$	8.988×10^{9} m/farad
Permeability of free space	μ_0	$4\pi \times 10^{-7}$ weber/amp.m
Boltzmann's constant	*k*	1.380×10^{-23} joule/°K
Gas constant	*R*	8.314 joules/mole °K
Avogadro's number	N_0	6.023×10^{23} molecules/mole
Mechanical equivalent of heat	J	4.186 joules/cal
Gravitational constant	*G*	6.67×10^{-11} N-m^2/kg^2

USEFULL CONSTANTS

Name	*Symbol*	*Value*
Electron rest energy	$m_e c^2$	0.5110 MeV
Electron magnetic moment	$\mu = eh/2m_e$	0.927×10^{-23} joule m^2/weber
Electron Compton wavelength	λ	2.426×10^{-12} m
Bohr radius	$a = 2\varepsilon_0 h/ m_e e^2$	0.529×10^{-10} m
Fine structure constant	$\alpha = e^2/2\varepsilon_0 hc$	1/137
Rydberg constant	R_∞	1.097×10^{-7} m

SOME MATHEMATICAL CONSTANTS

π	=	3.1415927	$\sqrt{2}$	=	1.4142136
e	=	2.7182818	ln 2	=	0.6931472
e^{-1}	=	0.3678794	ln 10	=	2.3025851

SOME MATHEMATICAL SYMBOLS

$=$	equals	$\neq$	is not equal to
$\approx$	equals approximately	$\equiv$	is identical to
$\propto$	is proportional to	$\sim$	is of the order of
$>>$	is (much) greater than	$<<$	is (much) smaller than
$\geq$	is greater than or equal to	$\leq$	is smaller than or equal to

THE GREEK ALPHABET

Alpha	$\Alpha$	α	Nu	$\Nu$	ν
Beta	$\Beta$	β	Xi	Ξ	ξ
Gamma	Γ	γ	Omicron	$\Omicron$	o
Delta	Δ	δ	Pi	Π	π
Epsilon	$\Epsilon$	ε	Rho	$\Rho$	ρ
Zeta	$\Zeta$	ζ	Sigma	Σ	σ
Eta	$\Eta$	η	Tau	$\Tau$	τ
Theta	Θ	θ	Upsilon	Υ	υ
Iota	$\Iota$	ι	Phi	Φ	ϕ
Kappa	$\Kappa$	κ	Chi	$\Chi$	χ
Lambda	Λ	λ	Psi	Ψ	ψ
Mu	$\Mu$	μ	Omega	Ω	ω

SOME CONVERSION FACTORS

1 eV	=	1.602×10^{-19} J
1 cal	=	4.19 J
1 J	=	0.239 cal
1 HP	=	746 W
1 A	=	10^{-10} m
1 rad	=	57.3^{0} = 0.159

Appendix B: PASCO - ROTATIONAL DYNAMICS APPARATUS

The equipment that you will use in this experiment is the PASCO Rotational Dynamics Apparatus consisting of

- a base plate and spindle with outlets for pressurised air
- two steel disks (12.5 cm diam., 1.6 kg)
- one aluminum disk (12.5 cm diam., 0.6 kg)
- optical readers with a 4 digit LCD display
- an air bearing for applying a torque with a hanging mass
- hanging mass (24.5 gm)
- two torque pulleys of different diameters (5.08 cm; 2.54 cm)

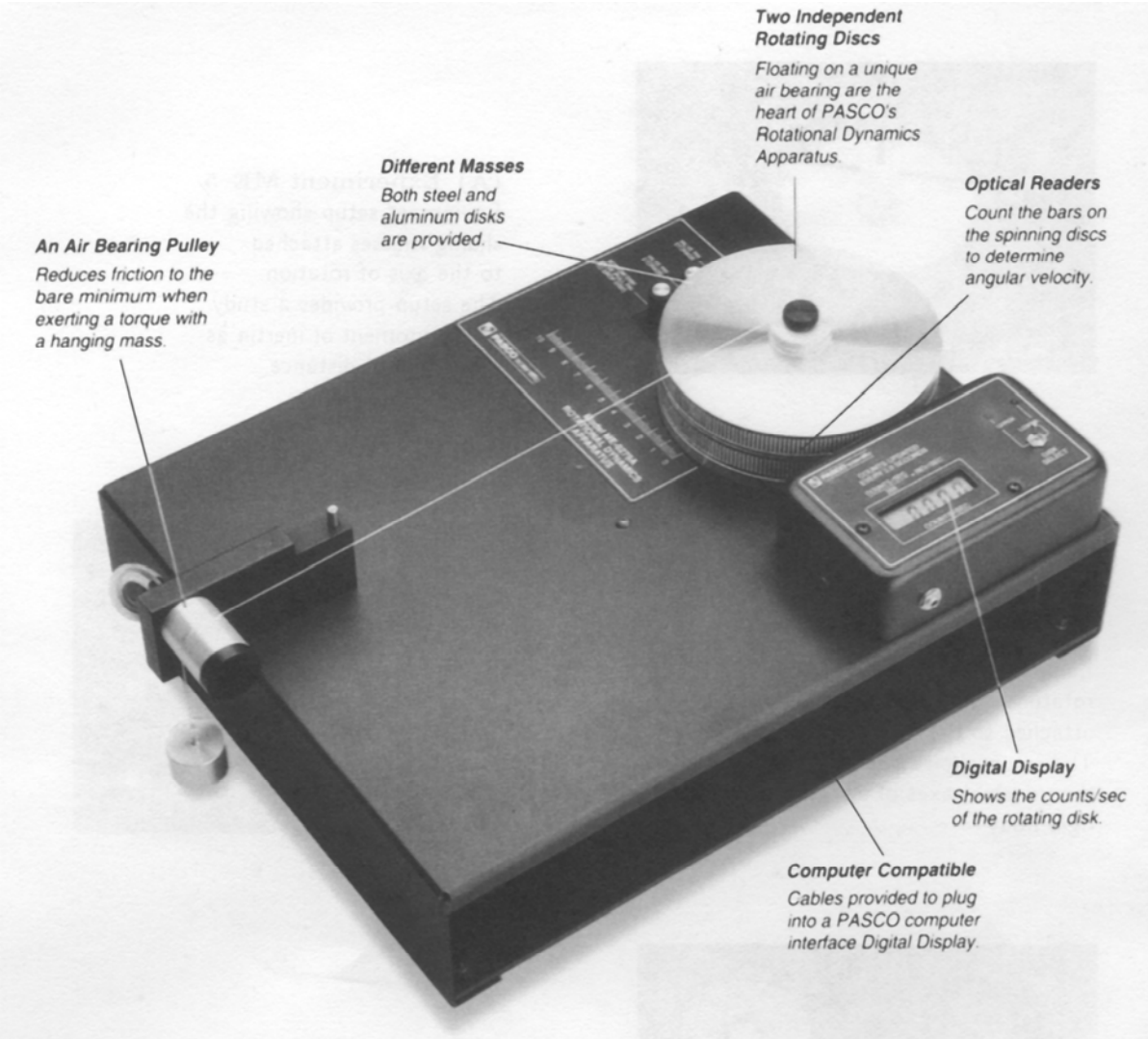

The rotating system consists of two disks which can be arranged as of equal mass (two steel disks) or of unequal mass (one steel, one aluminum). They can rotate independently (even in opposite directions), separated by a thin cushion of air or they can rotate as a single mass, one sitting on top of the other. The rotational velocity of each disk is independently monitored with the built-in optical detectors. Each disk has a pattern of alternating white and black bars on its side. The optical detectors count

the number of bars that pass per second, then display the reading as counts/sec on the digital display (for either the upper or the lower disk depending on the position of the switch on the top of the display housing); thus providing a continuous and accurate measurement of angular velocity. Because friction is minimal and the optical detectors are highly accurate, experiments give results that closely match theory.

In the most basic experiment, various torques are applied to a disk with a hanging mass, and angular acceleration is determined. The string hangs over a cylindrical air bearing, so that even string friction is kept extremely low.

With the accessories included, a variety of more advanced concepts can be investigated: the conservation of angular momentum, the relation between mass distribution and moments of inertia, the determination of principal axes, and much more.

Disk Rotation: The two disks can spin independently or together, or the upper disk can spin while the lower disk does not. These options are controlled using the two Valve Pins that are provided with the unit. When not in use, these pins can be stored in the Valve Pin Storage holes on the top of the base. The stainless steel spindle provides air which lifts the rotating plates apart from one another and the base plate.

Timing: The timing cycle for the optical readers lasts two seconds. During the first second of each cycle, the optical readers count the black bars that pass by. During the first few milliseconds of the second half of the cycle, this count is displayed. A dead time then follows until the full two halves of the second cycle is complete. The cycle then begins again.

In this experiment, a hanging mass is used to apply a constant torque on a rotating disk. The experiment begins with the disk at rest. However, there is no way to ensure that the torque is first applied at the instant that a timing cycle begins. Because of this, the timing for the experiment will generally be like one of the two examples shown in Figure 1. The diagram shows a sample graph of angular velocity as a function of time.

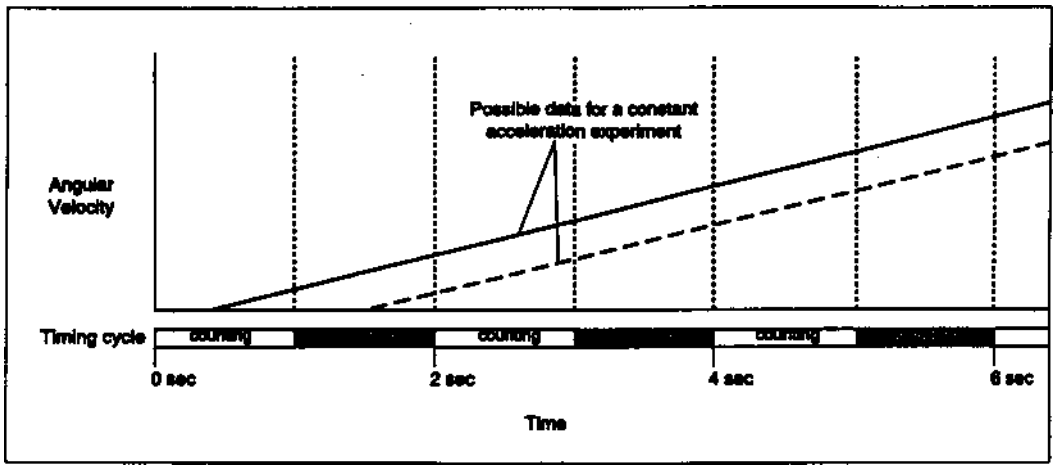

There is generally some delay between the start of the first timing cycle and the time when the torque is first applied. The graph shows two possibilities. In the first possibility (shown by the dashed line), the experiment begins (i.e., the torque is applied) during the dead half of at timing cycle, when the optical readers are not counting. In this case the first non-zero count that is displayed will be usable data. However, if the experiment begins during the counting half of a timing cycle, as for the solid line in the graph, the first displayed count will not be usable data. In this case, you will need to throw out the first count and use the two succeeding counts.

Appendix C: ANALYSIS OF RANDOM ERRORS IN MEASUREMENTS

Random errors are produced by a large number of unpredictable and unknown variations in the experimental situation. They can result from small errors in judgment on the part of the observer, such as in estimating tenths of the smallest scale division. Other causes include any unpredictable fluctuations in the experimental conditions, provided these fluctuations are really random. It is found empirically that such random errors are frequently distributed according to the normal distribution function, and use of this fact can be useful in minimizing the effects of random errors. We give here a few useful results.

Suppose we measure a certain physical quantity several times, obtaining several values each of which deviates somewhat from the true value of the quantity. If these deviations are due purely to random errors, and if the errors are distributed according to the normal distribution function, then it can be shown that the best estimate of the value of the quantity which can be obtained from the data is the arithmetic mean or average, which is a reasonable enough result. Now, how reliable is this mean? One can calculate a standard deviation for the individual observations, and this gives an index of their reproducibility. We expect the mean to be more reliable than the individual measurements. In fact, if we take several sets of *n* observations each, compute the mean and standard deviation for each set, and then find the standard deviation for the mean, we can show that this is smaller than those of the individual measurements in the set by a factor of approximately $\sqrt{n}$. It should be noted, however, that this conclusion is valid only if one is certain that the errors are entirely random, and that there is no systematic error which could contribute an uncertainty greater than that indicated by the purely statistical considerations.

The theory of errors has received a great deal of attention in the development of science and mathematics, especially in that of probability theory and statistics. The concept of standard error has been most widely used in reporting the results of measurement. The computation of the standard error is based on the assumption that repeated observations of the same phenomenon can be assigned equal weight. It is useful to explore a case of tn observations of a phenomenon, $x_1, \ldots, x_n$. If $\bar{x}$ is the mean of these observations, i.e., $\bar{x} = (x_1 + \ldots + x_n)/n$, and σ is the standard deviation, i.e.,

$$\sigma = \sqrt{\frac{\left\{\left(x_1 - \bar{x}\right)^2 + \ldots\ldots + \left(x_n - \bar{x}\right)^2\right\}}{n}}$$

then the standard error of $\bar{x}$ is $\sigma/\sqrt{n}$, and it is said that the "true" value of the observed variable lies in the interval between $\bar{x} + \sigma/\sqrt{n}$ and $\bar{x} - \sigma/\sqrt{n}$

Suppose, for example, that we want to repeat measurements of the period of a pendulum with the same stopwatch and we find that our measurements vary among each other by 0.1 sec on the average, i.e., <r = 0.1. If we want to determine the period to an accuracy of 0.01 sec, i.e., require the standard error be 0.01, we must repeat the measurements by $n = (0.1/0.01)^2 = 100$ times.

Under very general assumptions, it may be shown that the sum of independent random errors of observation has, as the number of terms becomes large, a normal (bell-shaped) distribution with mean μ and standard deviation σ, in which μ is the sum of the means of the means of the individual sources of error and σ^2 is the sum of their individual variances (standard deviations squared); i.e., $\sigma^2 = \sigma_1^2 + \ldots + \sigma_\kappa^2$, in which there are κ sources of error. This formulation, known as the *central limit theorem* is one of the fundamental theorems of modern probability theory. Its importance lies in the fact that it is largely independent of the particular character or distribution of the individual errors. It was first stated by Laplace in 1812 and given its rigorous proof in 1901 by Lyapunov.

Finally, we discuss a situation where we may wish to compute a quantity *Q* which is determined from a series of measured quantities a, 6, *c*,..., by means of a known relation which we may write in general as

$$Q = f(a, b, c, \ldots).$$

Suppose that each of the quantities a, b,... has an associated standard deviation σ_a, σ_b ...What is then the standard deviation of the resulting value of *Q?*

We simply state (without proof) that the standard deviation of Q, which we may call erg, should be calculated from the prescription

$$\sigma_Q^2 = \left[\frac{\partial Q}{\partial a}\right]^2 \sigma_a^2 + \left[\frac{\partial Q}{\partial b}\right]^2 \sigma_b^2 + \ldots\ldots$$

where ∂'s refer to partial derivatives. For instance, if $Q = ab$,. then

$$\sigma_Q^2 = a^2 b^2 \left\{\left(\frac{\sigma_a}{a}\right)^2 + \left(\frac{\sigma_b}{b}\right)^2\right\}$$

Appendix D: METHOD OF LAST SQUARES IN CURVE FITTING

The method of least squares determines the coefficients of an empirical equation so that the sum of the squares of the vertical (y) distances from each point to the resulting curve is a minimum.

Since we wish to minimize the sum of the squares of the distances between our data points *{x,y}* and our functional curve, y = *f(x),* we minimize

$$\sum_{i=1}^{n}\left(y_i^{'}-y_i\right)^2$$

where the sum is evaluated over the n measurements we have taken.

Linear Regression:

For example, we might try to fit the straight line *y — mx + a* to the set of data points *{x,* y'} The procedure thus requires the evaluation of *m* and a such that

$$\sum_{i=1}^{n}\left(y_i^{'}-\left(mx_i+a\right)\right)^2$$

is minimum. This is achieved by taking

$$m=\frac{\sum_{i=1}^{n}\left(x_i-\overline{x}\right)y_i^{'}}{\sum_{i=1}^{n}\left(x_i-\overline{x}\right)^2}$$

and,

$$a=\frac{1}{n}\left\{\sum_{i=1}^{n}y_i^{'}-m\sum_{i=1}^{n}x_i\right\}$$

Example: Suppose that you are given a spring of non-negligible unknown mass, *m,* and unknown force constant, *k,* and asked to determine these unknowns. A straightforward approach would be to set the spring in oscillatory motion by attaching a mass M to one of its ends and measure the period of oscillation, and repeat this procedure for several values of M. Table below provides a typical "mass on a spring" data attained from such an experiment.

Mass (m) g	Observed Periods (s)
50	0.72
100	0.85
150	0.96
200	1.06
250	1.16
300	1.23

A theoretical Derivation gives the period of the oscillation in trems of M, m and k as

$$T = 2\pi\sqrt{\frac{\left(M + \frac{1}{3}m_s\right)}{k}}$$

This equation can be rearranged in the form

$$\frac{T^2}{4\pi} = \frac{M}{k} + \frac{m_s}{3k}$$

Thus, if one plots $T^2/4\pi$ as a function of M in a straight line, the spring constant can be determined from the slope, and the mass of the spring can be estimated by proper extrapolation of the graph.

To gain experience, you are advised to fit a straight line to the 6 data points by linear regression; hence calculate the slope and the intercept to compute it and m_s.

Appendix E: PROBABILITY DISTRIBUTIONS

Because of the central role of measurements in all of science, these concepts are of great importance. In all branches of science we deal with numbers which originate in experimental observations. In fact, the very essence of science is discovering and using correlations among quantitative observations of physical phenomena.

Statistical considerations are important for two reasons. First, measurements are never exact; the numbers which result are of very little value unless we have some idea of the extent of their inaccuracy. If several numbers are used to compute a result, we need to know how the inaccuracies of the individual numbers influence the inaccuracy of the final result. In comparing a theoretical prediction with an experimental result, we need to know something about the inaccuracies of both is anything intelligent is to be said about whether or not they agree.

A second reason for the importance of statistical concepts is that some physical laws are intrinsically statistical in nature. A familiar example is the radioactive decay of unstable nuclei. In a sample of a given unstable element, we have no way of predicting when any individual nucleus will decay, but we can describe in statistical terms how many are likely to decay in a given time interval, how many will probably be left after a certain time, and so forth. Thus, in this case, we deal not with precise predictions of events but with *probabilities of* various combinations of events. In the development of quantum mechanics, probability theory is of even more fundamental importance.

Mean and Variance:

We begin with some fundamental considerations involved in most common probability distributions and provide a useful framework for introducing basic statistical ideas. On this purpose we supply a table of *random numbers* (cf., Table 1) which you may use in a variety of exercises to become familiar with the elementary probabilistic concepts. You could have constructed your own table of random numbers (by throwing dice, or by collecting numbered balls from an urn, for instance).

In a list of random numbers, the numbers 0 thorough 9 appear with equal probability. This means that for example, if we count the number of 7's in a very large list, the total number of 7's will be nearly one-tenth of the total number of digits. As the total number increases, the ratio approaches one-tenth more and more closely. This in fact, is precisely what we mean when we say that the probability of occurrence of a 7 is 1/10.

In characterizing a set of numbers, especially when these numbers are associated with an experimental result such as a measurement or an examination score, several properties of the set are of interest. The most obvious one is the *arithmetic mean,* usually called simply the mean or average. The questions "What was the average on the exam? Was my score above or below average?" are heard in every classroom. To compute the mean we simply add all the numbers and divide by the total number of numbers. Formally, if we have *N* numbers denoted by n_1, n_2,...n_N, or a typical one by n_i, where i = 1,2, ..., N and if we denote the mean by n, then its definition is

$$\overline{n} = \frac{n_1 + n_2 + ... + n_N}{N} = \frac{1}{N}\sum_{i=1}^{N} n_i$$

Another interesting question, after the mean has been found, is how much the various numbers differ from the mean, on the average. If the average exam score is 60, but most of the scores fall in the range between 55 and 65, the spread is not very great, but if they are sprinkled from 25 to 95, the spread is greater. Clearly, the significance of a score of 50 is different in the two cases. Thus we need a quantitative measure of this spread or *dispersion, as* it is usually called.

One possibility is simply to take the average of these differences. This gives rise to some difficulty, since some differences are positive and others negative. In fact, it is fairly easy to prove that the average of the differences is always zero. To circumvent this difficulty, we square each difference, obtaining numbers which are always positive. Then we average the squares by adding them and dividing by N , and finally take the square root. The result is sometimes called the "root-main-square deviation." but the usual name is the standard deviation. This measure of dispersion is usually denoted by σ. Translating the above word definition into symbols, we have

$$\sigma^2 = \frac{(n_1 - \overline{n})^2 + (n_2 - \overline{n})^2 + ... + (n_N - \overline{n})^2}{N} = \frac{1}{N}\sum_{i=1}^{N}(n_i - \overline{n})^2$$

The square of the standard deviation σ^2 is called the variance.

It is easy to see that in a *hypothetical* very large set of random numbers, 0 through 9, the average should be exactly 4.50. But if we consider the set of numbers (with 320 digits) taken from the upper four rows of Table 1, the resulting average may differ somewhat from 4.50, and if we consider a smaller (16-digit) sample taken from the upper left portion of table, the average is not likely to be close to 4.50.

Exercise 1: Select from Table 1 a sample of N = 80 digits. Enter their frequencies F_n and computed probabilities $P_n = F_n/N$ in Table 2. Calculate the sample mean and variance of these numbers and record them in table. Compare your results with what you would expect if N were infinitely large, say 10^{10} .

Table 1: A Sample of 560 digit random numbers

2 6 7 1	4 6 9 0	1 5 5 0	2 2 6 2	0 2 7 0
2 5 9 7	8 0 3 4	0 7 8 5	2 9 7 8	9 8 8 5
4 4 0 9	0 2 3 7	9 1 1 1	0 2 5 0	2 2 9 0
3 2 7 5	7 5 1 9	9 7 4 0	4 5 7 7	0 0 4 6

2 0 6 4	0 2 8 6	3 3 9 8	1 3 4 8	3 8 3 5
0 3 9 1	6 0 3 5	9 2 3 0	4 9 9 9	6 9 7 1
3 3 3 2	0 6 0 8	6 1 1 3	0 3 9 1	4 7 1 2
5 7 8 9	9 9 2 6	2 4 7 5	2 1 4 4	7 9 6 3

1 8 8 6	2 0 7 9	3 0 0 4	9 6 8 6	6 5 0 9
5 6 6 9	4 3 6 7	9 3 0 6	2 5 9 5	3 3 2 6
5 3 3 6	5 8 4 5	2 0 9 5	6 4 4 6	5 7 7 2
5 6 9 4	3 6 4 1	1 0 8 5	8 7 0 5	6 0 7 8

5 4 1 6	9 0 6 6	6 8 0 8	0 4 2 3	2 9 2 0
0 1 5 5	1 6 5 2	7 8 9 7	4 3 3 5	7 8 7 2
3 5 6 7	7 1 0 9	9 6 9 0	3 7 3 9	5 0 5 4
8 5 2 5	0 5 7 7	8 9 4 0	9 4 5 1	9 1 6 1

6 7 2 6	0 8 7 6	3 8 1 8	7 6 0 7	0 4 3 1
8 8 5 4	3 5 6 6	0 3 9 8	0 7 4 1	8 4 4 9
8 7 8 7	3 0 4 3	5 0 6 3	0 6 1 7	8 7 4 5
1 7 7 0	5 0 4 8	7 7 2 1	7 0 3 2	2 1 8 5

3 6 2 3	9 6 3 6	3 6 3 8	1 4 0 6	7 9 8 1
5 7 3 1	3 9 7 8	8 0 6 8	7 2 3 8	8 5 7 7
9 7 1 5	3 3 6 3	0 7 3 9	2 6 4 4	7 7 0 2
4 9 1 7	8 8 6 6	3 6 3 2	5 3 9 9	3 6 5 7

5 1 7 5	7 4 2 2	2 4 7 6	2 6 0 7	2 4 9 0
6 7 1 3	3 0 4 1	8 1 3 3	8 7 4 9	7 3 9 5
8 8 3 5	6 7 4 5	3 5 9 7	3 4 7 6	4 4 1 8
3 8 1 6	3 4 5 5	7 7 7 5	9 3 1 5	9 0 7 2

Table 2

Number	Frequency	Probability
0		
1		
2		
3		
4		
5		
6		
7		
8		
9		

Mean	Variance
4.50	8.25

The calculations are fairly simple if instead of working with individual numbers you use the frequency of occurrence of each number. For example, if the number n_i occurs F_i times in the sample, then the sample mean is given by

$$\overline{n} = \frac{n_1 F_1 + n_2 F_2 + \ldots . n_N F_N}{F_1 + F_2 + \ldots + F_N} = \frac{\sum_{i=1}^{N} n_i F_i}{\sum_{i=1}^{N} F_i}$$

in which the sums involve only 10 terms instead of 80 or more. Similarly, the sample variance is given by

$$\sigma^2 = \frac{\sum_{i=1}^{N} F_i \left(n_i - \overline{n}\right)^2}{\sum_{i=1}^{N} F_i}$$

We should note that in each case $\sum_{i=1}^{N} F_i$ is equal to the total number of digits *N* in the sample.

In the present case we expect for a hypothetically large sample *(N* >> 1) $F_i = N/10$ for all *i.* Then the above equations give $\overline{n}$ = 4.5, and σ^2 = 8.25.

It should not be surprising if for a limited sample of 80 or 160 entries we find that the mean is not exactly 4.50. We should expect, however, that the agreement improves with larger sample sizes.

Questions:

1. Show that for any set of *N* numbers, the average of the deviations from the mean is equal to zero.
2. For any set of *N* numbers n<, prove that the variance is given by

$$\sigma^2 = \ < n^2 >_{avg} - (\overline{n})^2,$$

where $< n^2 >_{avg}$ denotes the average of n_i^2.

Binomial Distribution:

Consider a set of *N independent* experiments, in each of which there are two possible outcomes, denoted by H or T, as in a coin tossing game, for instance. When a symmetric coin is tossed, the probabilities for it to land 'heads' (H) or 'tails' (T) are each 1/2 (i.e., 50%). We have no control over the way it lands, and each toss is *independent* of all previous tosses. Thus if we have just tossed a head, the probability of tossing another head is still |; the coin doesn't remember the previous toss.

Imagine that a coin is tossed twice *(N* = 2). What is then the probability of obtaining two heads? This is a different question. The success of this event depends on the success of two independent events, each one of which has a success probability of i; the probability of the composite event is the product of the separate probabilities, or y. Another way to obtain this result is to note that when the coin is tossed twice, there are four equally probable results:

HH HT TH TT

Only one of these four is the event we want, so its probability is *1/4*

In *three* tosses *(N* — 3), each of the three has two possible outcomes, so the number of equally probable events is 2^3, or 8. They are

HUH HHT HTH THE HTT THT TTH TTT

Thus the probability for *HHH,* three heads one after another, is 1/8. In fact, the probability for each of the above events is $(1/2)^3$. For *N* tosses, the probability of any specified arrangement of heads and tails is $(1/2)^n$.

We now ask a slightly different question. What is the probability for exactly two heads in three tosses? We see that there are three different arrangements which give this result *HHT, HTH,* and *TEH .* Each has probability *1/8,* so the total probability is 3/8.

It should be noted that each different arrangement of H's and T's in *N* tosses is contained in a symbolic development of the following product of *N* factors:

$$(H_1+T_1)\ (H_2+T_2)\ldots\ldots\ (H_N + T_N)$$

which generates a sum of 2^N terms, one of each of the 2^N possible outcomes. If we drop the labels and neglect the order in which the H's and T's appear in a given product, then

$$(H + T)^3 \quad = \quad HHH + 3HHT + ZHTT + TTT \text{ etc}$$

It should be evidently clear that the coefficient '3' (i.e., the number of different arrangements) for having exactly two H's and one T in three tosses appears as nothing but the binomial coefficient:3!/(1!2!)

In general, the number of different arrangements of having n heads and n'(= *N — n)* tails is given by the binomial coefficient

$$C_N(n) \equiv \binom{N}{n} \equiv \frac{N!}{n!(N-n)!}$$

Finally, the probability for n heads in *N* tosses, which we denote by

$$P_N(n) = \binom{N}{n}\left(\frac{1}{2}\right)^2$$

We now consider a slight generalization. In the cointoss the probability for an individual head was 1/2. Suppose we again have *N* independent events, but the probability for a win is not 1/2 but some other value p between zero and unity. What then is the probability for exactly n wins in *N* trials?

The whole calculation goes through just as before, with one simple change. In this case, the probability for a specific arrangement of n wins and *n' = N — n* losses, in which each win has a probability p and each loss has a probability *q* = 1 — *p* is

$$p^n q^{n'} \quad or \quad p^n\left(1-p\right)^{N-n}$$

Thus the probability for exactly n wins in *N* trials (without regard to any specific arrangement) is

$$P_N(n) = \binom{N}{n} p^n (1-p)^{N-n}$$

We note in the coin-tossing case that we have p = *q* =j, and this expression reduces to the previous result.

For completeness, we provide the mean value of n, and the variance for the binomial distribution without proof. They are given by

$$\overline{n} = Np \quad \text{and} \quad \sigma^2 = Np(1 - p)$$

Questions:

1. For the binomial distribution, prove that the sum of all probabilities add up to unity, i.e., show that

$$\sum_{n=0}^{N} P_N(n) = 1$$

2. The computation of several consecutive terms of many discrete probability distributions can easily be carried out by means of recurrence formulas. Verify the following recurrence relation for the binomial distribution

$$P_N(n+1) = \frac{p(N-n)}{q(n+1)} P_N(n)$$

Thus, once you calculate $P_n(0)$, you can easily compute the binomial probabilities for $1 \le n \le N$.

Exercise 2: The random number table (Table 1) provides a number of interesting illustrations of the binomial distribution. Taking the four-digit random numbers (there are 140 of them), make a frequency count of the number of even numbers that occur in each group of 4-digits. That is, how many digit numbers do not contain an even number, how many contain just one even number, how many two even numbers, how many three and how many four? Record these frequencies in Table 3A. Using the frequencies you record, calculate the sample mean and variance, and enter these values in table as well. Compare your results with the predictions of the binomial distribution. (Note that $N = 4$ and recall that the probability of having a single digit appear as an even number is 5/10; thus $p = q = 1/2$.)

Table 3A

number of even numbers	0 1 2 3 4
frequency F_n probability P_n binomial probability P/v(n)	
Mean:	Variance:

Exercise 3: Now, instead of taking 4-digit random numbers, take the 16-digit numbers in the square boundaries (there are 35 of them). Make a similar frequency count of the number of 7's in each group of 16-digits. That is, how many 16-digit groups contain no 7's, one 7, two 7's, three 7's, four 7's, etc. Record these frequencies in Table 3B. What is your finding on the probability of having ten 7's in a group of 16-digits; of having sixteen 7's in 16 digits? Calculate the corresponding binomial probabilities for $n < 5$. There is no need in going any further. Why?

Table 3B

number of even 7's	0 1 2 3 4 5 6
frequency F_n probability P_n binomial probability P/v(n)	

When N is large the binomial distribution formula becomes quite tedious to compute because of the presence of large factorials of large numbers. Fortunately in this case, there are approximate representations which are much easier to use.

The appropriate approximation when p becomes very small as N grows large, so the mean $\overline{n} = Np$ remains finite, is the *Poisson* distribution. A different approximation when p is not too small, however N grows large is called the *normal* or *Gaussian* distribution.

Poisson Distribution:

The starting step to derive the Poisson distribution formula is to make reference to the binomial probability

$$P_N(n+1) = \frac{1}{n!}\frac{N!}{(N-n)!}p^n(1-p)^{N-n}$$

When $N \to \infty$, and $p \to 0$, such that the product $\lambda = Np$ remains finite, the only values of n with appreciable probabilities are very small compared to N (cf., exercise 3).

Therefore, consider first the factor

$$\frac{N!}{(N-n)!} = N(N-1)(N-2)....(N-n+1)$$

This is a product of n factors, none of which is significantly different from *N.* We therefore replace it by N^n.

Second, we write the factor $(1 - p)^{N-n}$ as

$$(1-p)^{N-n} = \frac{(1-p)^N}{(1+p)^n}$$

and note that the denominator is very nearly equal to unity because it is a number very close to unity raised to a not very large power. What remains is then

$$P_n(n) = \frac{1}{n!} N^n p^n (1-p)^N$$

$$= \frac{\lambda^n}{n!}(1-p)^{\lambda/p}$$

$$= \left[\frac{\lambda^n}{n!}(1-p)^{1/p}\right]^{\lambda}$$

All that remains now is to evaluate the limit

$$\lim_{p\to 0}(1-p)^{1/p}$$

This limit is discussed in most books on elementary calculus and is shown to have the value *1/e,* where *e* is the base of natural logarithms. Finally, we obtain the expression for the Poisson distribution:

$$P_\lambda(n) = \frac{\lambda^n}{n!} e^{-\lambda}$$

the mean and variance of which are given by $\sigma^2=\lambda$ and $\bar{n} = \lambda$

Exercise 4: Using $\bar{n} = \lambda$ and $\sigma^2=\lambda$, calculate the mean and the variance of the distribution of the number of 7's over a group of 16-digit random numbers. (Note that, p = 1/10, N = 16, so λ = 1.6.) Calculate the Poisson probability, $P_\lambda(n)$, for a few small n-values, say for n = 0, 1, and 2. Compare your results with those of the Binomial distribution, which you have recorded in Table 3B.

Questions:

1. Verify that the Poisson distribution is properly normalized in the sense that

$$\sum_{n=0}^{\infty} P_{\lambda}(n) = 1$$

2. Derive the following recurrence relation for the Poisson distribution

$$P_{\lambda}(n+1) = \frac{\lambda}{n+1} P_{\lambda}(n)$$

3. A book of 500 pages has 375 misprints. What is the probability that a page chosen at random will have 2 or more misprints?

Normal Distribution:

The normal (Gaussian) distribution is important for a variety of reasons. It is a useful approximation for the binomial distribution when large numbers are involved *(N,* n >> 1) and the binomial distribution becomes too tedious to compute. More important, it is often found experimentally that random errors associated with physical measurements are distributed according to the normal distribution; it is thus of central importance in the *analysis of experimental errors.*

To derive the normal distribution from the binomial, we assume that the significant values of n are very large, since *N* is large, so the probability *P* changes relatively little from one value of *n* to the next. In this case we can regard n as a continuous variable, rather than an integer. In addition we make use of the fact that the binomial distribution becomes more and more sharply peaked as *N* increases, as shown by the fact that n is proportional to *N,* while σ, which measures the width of the distribution, increases only as$\sqrt{N}$. Thus only the values of *n* relatively close to *n* have significant probabilities.

We begin with the recurrence relation

$$P_n(n+1) = \frac{p(N-n)}{q(n+1)} P(n)$$

of the binomial distribution. Regarding P as a continuous function of the variable n, we can approximate the derivative of this function as P(n + 1) - *P(n),* taking Δn = 1. That is

$$P'(n) \approx P(n+1) - P(n) = \left\{ \frac{p(N-n)}{q(n+1)} - 1 \right\} P(n)$$

Because only large values of *n* are significant, we replace *(n* + 1) in the denominator by *n.* Then rearranging and using the fact *p* + *q* = 1, we obtain

$$\frac{P'(n)}{P(n)} = \frac{Np - n}{qn}$$

We now make use of the fact that only values of *n* near $\overline{n} = Np$ are important; we replace *n* in the denominator by the average *Np,* and thus the denominator becomes *Npq.* Replacing *Np* by the mean *n, Npq* by the variance σ^2, we write

$$\frac{P'(n)}{P(n)} = \frac{\overline{n} - n}{\sigma^2}$$

To find out what *P(n)* is, we integrate both sides of the above expression, writing the integration constant lnC:

$$\ln P(n) = \ln C - \frac{(n - \overline{n})^2}{2\sigma^2}$$

or, taking antilogs (exponential) of both sides,

$$P(n) = C - e^{-\frac{(n-\overline{n})^2}{2\sigma^2}}$$

The value of the constant *C* is determined by the requirement that the total probability of all possible values of *n* must be unity. Instead of summation over n, we now integrate; *C* must be chosen to satisfy the requirement:

$$\int dnP(n) = 1$$

Evaluation of the integral requires some trickery, and we simply state the result that *C* must be equal to $1/(2\pi\sigma^2)^{1/2}$. Finally, the normal distribution function is

$$P(n) = \frac{1}{\sqrt{2\pi\sigma}} \exp\left\{ -\frac{(n - \overline{n})^2}{2\sigma^2} \right\}$$

Exercise 5: We now apply some tests to our random number table (Table 1) to find out whether it is really random. With 560 digits, we expect on the average to obtain 56 of each number from 0 to 9. Suppose we find 59 sevens; does this mean the numbers are not really random, or is this number reasonable with certain probabilistic limits?

To answer this question, we note first that the probability for a certain number *n* of 7's in a 560-digit random number table is given by the binomial distribution with

N = 560, p = 0.10. The mean and the standard deviation of this distribution are given by

$$\bar{n} = 56 \quad \text{and} \quad \sigma \approx 7$$

Approximating the binomial distribution by the normal distribution, one can show that (you need not do it!) the probability of expecting n between the limits $\bar{n}-\sigma$ and $\bar{n}+\sigma$ is about 0.68. That is, there is a 68% chance that any digit frequency will be within one standard deviation of the mean (i.e., between 49 and 63). Similarly, the probability for n to fall between two standard deviations is about 0.95. That is, there is only a 5% chance that any digit frequency will not be within two standard deviations (i.e., between 42 and 70). A frequency of 59 sevens falls within only 0.4 standard deviation, and thus it falls within the realm of reasonable probability. It should be noted that the probability for n to be *exactly* 56 is rather small. Compute this probability. Using the above criterion, check your digit frequencies for evidence of non-random ness.

Table 4: Normal Probablity Integral

κ	$\Phi(\kappa)$	κ	$\Phi(\kappa)$	κ	$\Phi(\kappa)$
0.1	0.080	0.6	0.452	1.2	0.770
0.2	0.159	0.7	0.516	1.5	0.866
0.3	0.236	0.8	0.576	2.0	0.954
0.4	0.311	0.9	0.632	2.5	0.988
0.5	0.383	1.0	0.683	3.0	0.997

Appendix F: NUMERICAL INTERPOLATION

If a numerical table consists of values u_n of a function at equal intervals *h* of the argument as follows,

$$f(a) = u_1$$
$$f(a+h) = u_2$$
$$f(a+2h) = u_3$$
$$\ldots\ldots$$

then the following interpolation formula can be used to estimate the value of the function at *"a + ph" (p <* 1):

$$f(a+ph) \approx u_1 + p\{u_2 - u_1\} + \frac{1}{2}p\{p-1\}\{u_1 - 2u_2 - u_3\}$$

For example, suppose that you are given a sample of a table of values for hyperbolic sine as

X	Sin x
0.90	1.0265
1.00	1.1752
1.10	1.3356
1.20	1.5059
1.30	1.6984

If you wish to calculate sinh 1.07, for instance, then the above interpolation -formula can readily be applied with

ph = 0.07, or p = 0 . 0 7 / 0 . 1 0 = 0.7

and

u_1= 1.1752, u_2 = 1.3356, u_3 = 1-5059

to yield

sinh 1.07 ≈ 1.2864

which differs from the true value 1.2862 by only about 0.0002.

Appendix G: NUMERICAL SOLUTIONS OF ROOT EQUATIONS

One is often faced with the problem of finding more or less accurately an *x* such that

$$f(x)=0$$

where *f(x)* is sufficiently complicated that a direct solution is not possible; examples are

$$f(x) = x^2 + \log x, \qquad or \qquad f(x) = \tan x - \frac{1}{x}$$

A simple minded approach, provided *f(x)* can be calculated for arbitrary *x,* is to start by choosing two abscissas x_1 and x_2 such that the corresponding function values $y_1 = f(x_1)$ and $y_2 = f(x_2)$ are oppositely signed. One then knows that the root of $f(x) = 0$ lies at some place between x_1 and x_2. The next step is to interpolate between the points: (x_1, y_1) and (X_2,y_2) by a straight line and determine a third abscissa x_3 at which this straight line intersects the x axis. Hence, one obtains

$$x_3 = x_1 - \frac{x_2 - x_1}{y_2 - y_1} y_1$$

to yield a crude approximation to the root.

Next, depending on whether $y_3 = f(x_3)$ is positive or negative, among the set of former two points one selects the one (say (x_1,y_1), for instance) for which the ordinate has the opposite sign of y_3. A further interpolation between (x_1, y_1) and (x_2, y_2) leads to a fourth abscissa

$$x_4 = x_1 - \frac{x_3 - x_1}{y_3 - y_1} y_1$$

where x_4 is presumably a better approximation to the root.

Carrying out this iterative procedure over several more steps, one attains the series of abscissas: $x_1, x_2 \ldots, x_n$ which converge to the desired value for which $f(x) = 0$.

This method is sometimes called *regula falsi.*

Another alternative technique is the *Newton-Raphson* iterative method, according to which, "if x_n is an approximation to the root, then x_{n+1} is usually a better approximation", where

$$x_{n+1} = x_1 - \frac{f(x_n)}{f'(x_n)}$$

in which the *prime* denotes the first derivative, i.e,

$$f'(x) = \frac{df(x)}{dx}$$

Appendix H: ELEMENTARY ANALYTICAL METHODS

Rules for Differentiation:

$$\frac{d}{dx}(fg) = f\frac{dg}{dx} + g\frac{df}{dx}$$

$$\frac{d}{dx}(f/g) = \frac{1}{g}\frac{df}{dx} - \frac{f}{g^2}\frac{dg}{dx}$$

$$\frac{d}{dx}f(g) = \frac{df}{dg}\frac{dg}{dx}$$

$$\frac{d}{dx}(f^g) = f^g\left\{\frac{g}{f}\frac{df}{dx} + \ln gf\frac{dg}{dx}\right\}$$

Arithmetic Mean of n Quantities: *A*

$$A = \frac{1}{n}\{a_1 + a_2 + ... + a_n\}$$

Geometric Mean of n Quantities: *G*

$$G = (a_1 a_2 ... a_n)^{1/n}, \qquad a_i > 0 \;\; (i = 1,2, ..,n)$$

Harmonic Mean of n Quantities: *H*

$$\frac{1}{H} = \frac{1}{n}\left(\frac{1}{a_1} + \frac{1}{a_2} + ... + \frac{1}{a_n}\right)$$

Binomial Series:

$$(1+x)^{\alpha} = 1 + \alpha x + \frac{\alpha(\alpha-1)}{2!}x^2 + \frac{\alpha(\alpha-1)(\alpha-2)}{3!}x^3 + ...,$$

$$-1 < x < 1$$

Binomial Theorem:

$$(a+b)^n = a^n + \binom{n}{1} a^{n-1} b + \binom{n}{2} a^{n-2} b^2 + ... + bn \qquad \text{n is a positive integer}$$

Taylor Series of a Function:

$$f(x) = f(x_0) + (x - x_0) f'(x_0) + \frac{1}{2!}(x - x_0)^2 f''(x_0) + ...$$

Series Expansions of Some Functions:

$$\sin x = x - \frac{1}{3!}x^3 + \frac{1}{5!}x^5 - .....$$

$$\cos x = x - \frac{1}{2!}x^2 + \frac{1}{4!}x^4 - .....$$

$$e^x = 1 + x + \frac{1}{2!}x^2 + \frac{1}{3!}x3 + ...$$

$$\ln(1+x) = x - \frac{1}{2}x^2 + \frac{1}{3}x^3 - .....$$

Solutions of Quadric Equations:

$$Given \;\; az^2 + bz + c = 0,$$

$$z_{1,2} = -\left(\frac{b}{2a}\right) \pm \frac{\sqrt{\Delta}}{2a}$$

$$\Delta = b^2 - 4ac$$

$$z^1 + z^2 = -\frac{b}{a} \qquad z^1 z^2 = \frac{c}{a}$$

$$If \;\; \Delta > 0, \; two \; real \; roots.$$

$$If \;\; \Delta = 0, \; two \; equal \; roots.$$

$$If \;\; \Delta < 0, \; pair \; of \; complex \; conjugate \; roots.$$

Solutions of Cubic Equations:

Given $z^3 + a_2 z^2 + a_1 z + c = 0,$

and let $q = \frac{a_1}{3} - \frac{a_2^2}{9}, \quad r = \frac{a_1 a_2 - 3a_0}{6} - \frac{a_2^2}{27}, \quad \Delta = q^3 + r^2$

If $\Delta > 0$, *one real root and a pair of complex conjugate roots.*
If $\Delta = 0$, *all roots are real and at leat two of them are equal*
If $\Delta < 0$, *all roots are real*

Let

$$\lambda_1 = \left\{ r + \sqrt{\Delta} \right\}^{1/3}$$
$$\lambda_2 = \left\{ r - \sqrt{\Delta} \right\}^{1/3}$$

Then,

$$z_1 = \left[\lambda_1 + \lambda_2 \right] - \frac{a_2}{3}$$
$$z_2 = -\frac{1}{2}\left[\lambda_1 + \lambda_2 \right] - \frac{a_2}{3} + i\frac{\sqrt{3}}{2}\left[\lambda_1 - \lambda_2 \right]$$
$$z_3 = -\frac{1}{2}\left[\lambda_1 + \lambda_2 \right] - \frac{a_2}{3} - i\frac{\sqrt{3}}{2}\left[\lambda_1 - \lambda_2 \right]$$

If z_1,z_2 and z_3 are the roots of the cubic equations, then

$$z_1 + z_2 + z_3 = -a_2$$
$$z_1 z_2 + z_2 z_3 + z_3 z_1 = a_1$$
$$z_1 z_2 z_3 = a_0$$

Expansion in Series:

Very often in physics it is important to be able to calculate the value of a function at some neighboring point when one knows it at one point. For this purpose a "Taylor Expansion" is suitable. In the vicinity of a point *XQ,* the value of a function *f(x)* is given by

$$f(x) = f(x_0) + (x - x_0)\left[\frac{df(x)}{dx}\right]_{x=x_0} + \frac{1}{2}(x - x_0)^2\left[\frac{df(x)}{dx}\right]_{x=x_0} + \ldots.$$

The ratio of the third term to the second is

$$\frac{\frac{1}{2}(x - x_0)^2\left[\frac{df(x)}{dx}\right]_{x=x_0}}{(x - x_0)\left[\frac{df(x)}{dx}\right]_{x=x_0}} \square (x - x_0)$$

unless the derivatives are unusual in behaviour. Therefore if x — x_0 is small compared with 1, we can with a small error (one which can at least be calculated) approximate *f(x)* by using the formula

$$f(x) \approx f(x_0) + (x - x_0)\left[\frac{df(x)}{dx}\right]_{x=x_0}$$

For example, suppose y = Ax^5 and that we know $y_0 = Ax_0^5$ and wish to calculate *y* at *x* = *xo* + Ax. Then,

$$\left[\frac{df(x)}{dx}\right]_{x=x_0} = 5Ax_0^4$$

$$(x - x_0)\left[\frac{df(x)}{dx}\right]_{x=x_0} = 5A\Delta x x_0^4$$

and so

$$y = Ax_0^4 + 5Ax_0^4\Delta x \ldots.$$

With expressions involving powers, one can write the following equation:

$$(a + bx)^n = a^n\{1 + \frac{b}{a}x\}^n$$

and use the binomial expansion to give

$$a^n\{l+\frac{b}{a}x\}^n = a^n\{l+n\left(\frac{b}{a}x\right)+\frac{n(n-1)}{2!}\left(\frac{b}{a}x\right)^2+\frac{n(n-1)(n-2)}{3!}\left(\frac{b}{a}x\right)^3+...\}$$

If *(b/a)x* is small compared with 1, we can get a good approximation by dropping all the terms after *n(b/a)x.* Applying this to our problem above, we write

$$\begin{aligned} y &= A(x_0 + \Delta x)^5 \\ &= Ax_0^5(l + \Delta x / x_0)^5 \\ &= Ax_0^{\ 5}(1+ 5\Delta x / x_0 + ...) \\ &= Ax_0^{\ 5} + Ax_0^{\ 4}5\Delta x + ...) \end{aligned}$$

Exercise: Verify the following approximations when x is small compared to 1

$$(1 \pm x)^{1/2} = 1 \pm \frac{1}{2}x + ..., \quad (1 \pm x)^{-1/2} = 1 \mp \frac{1}{2}x + ...$$

Appendix I: TRIGONOMETRIC FUNCTIONS

Definitions:

$$\sin z = \frac{e^{iz} - e^{-iz}}{2i}, \qquad \cos z = \frac{e^{iz} + e^{-iz}}{2}$$

$$\tan z = \frac{\sin z}{\cos z}, \qquad \cot z = \frac{\cos z}{\sin z}$$

$$\sec z = \frac{1}{\cos z}, \qquad \csc z = \frac{1}{\sin z}$$

Negative Angle formulas:

$$\sin(-z) = -\sin(z),$$

$$\cos(-z) = \cos z,$$

$$\tan(-z) = -\tan z$$

Differentiation Formulas:

$$\frac{d^n}{dz^n}\sin z = \sin(z + \frac{\pi}{2}n)$$

$$\frac{d^n}{dz^n}\cos z = \cos(z + \frac{\pi}{2}n)$$

Relations:

$$\sin^2 z + \cos^2 z = 1$$

$$\sec^2 z - \tan^2 z = 1$$

$$\csc^2 z - \cot^2 z = 1$$

Addition Formulas:

$$\sin(z_1 + z_2) = \sin z_1 \cos z_2 - \cos z_1 \sin z_2$$

$$\cos(z_1 + z_2) = \cos z_1 \cos z_2 - \sin z_1 \sin z_2$$

$$\tan(z_1 + z_2) = \frac{\tan z_1 + \tan z_2}{1 - \tan z_1 \tan z_2}$$

$$\cot(z_1 + z_2) = \frac{\cot z_1 + \cot z_2 - 1}{\tan z_1 + \tan z_2}$$

Half Angle Formulas:

$$\sin(\frac{z}{2}) = \pm\sqrt{\frac{1-\cos z}{2}}$$

$$\cos(\frac{z}{2}) = \pm\sqrt{\frac{1+\cos z}{2}}$$

$$\tan(\frac{z}{2}) = \pm\sqrt{\frac{1-\cos z}{1+\cos z}} = \frac{1-\cos z}{\sin z} = \frac{\sin z}{1+\cos z}$$

Multiple Angle Formulas:

$$\sin 2z = 2\sin z\cos z = \frac{2\tan z}{1+\tan^2 z}$$

$$\cos 2z = \cos^2 z - \sin^2 z = \frac{1-\tan^2 z}{1+\tan^2 z}$$

$$\tan 2z = \frac{2\tan z}{1-\tan^2 z} = \frac{2\cot z}{\cot^2 z - 1} = \frac{2}{\cot z - \tan z}$$

$$\sin 3z = 3\sin z - 4\sin^3 z$$

$$\cos 3z = -3\cos z + 4\cos^3 z$$

Products of Sine and Cosine:

$$2\sin z_1 \sin z_2 = \cos(z_1 - z_2) - \cos(z_1 + z_2)$$

$$2\cos z_1 \cos z_2 = \cos(z_1 - z_2) + \cos(z_1 + z_2)$$

$$2\sin z_1 \cos z_2 = \sin(z_1 - z_2) + \sin(z_1 + z_2)$$

Addition and Subtraction of Two Circular Functions:

$$\sin z_1 + \sin z_2 = 2\sin\frac{z_1 + z_2}{2}\cos\frac{z_1 - z_2}{2}$$

$$\sin z_1 - \sin z_2 = 2\cos\frac{z_1 + z_2}{2}\sin\frac{z_1 - z_2}{2}$$

$$\cos z_1 + \cos z_2 = 2\cos\frac{z_1 + z_2}{2}\cos\frac{z_1 - z_2}{2}$$

$$\cos z_1 - \cos z_2 = -2\sin\frac{z_1 + z_2}{2}\sin\frac{z_1 - z_2}{2}$$

$$\tan z_1 \pm \tan z_2 = \frac{\sin(z_1 \pm z_2)}{\cos z_1 \cos z_2}$$

$$\cot z_1 \pm \cot z_2 = \frac{\sin(z_1 \pm z_2)}{\sin z_1 \sin z_2}$$

Relation between Squares of Sine and Cosine:

$$\sin^2 z_1 - \sin^2 z_2 = \sin(z_1 + z_2)\sin(z_1 - z_2)$$

$$\cos^2 z_1 - \cos^2 z_2 = -\sin(z_1 + z_2)\sin(z_1 - z_2)$$

$$\cos^2 z_1 - \sin^2 z_2 = \cos(z_1 + z_2)\cos(z_1 - z_2)$$

Polynomial Approximations:

$$\frac{\sin x}{x} \approx 1 - 0.16605x^2 + 0.00761x^4$$

$$\cos x \approx 1 - 0.49670x^2 + 0.03705x^4$$

Appendix J: HIYPERBOLIC FUNCTIONS

Definitions:

$$\sinh z = \frac{e^z - e^{-z}}{2}, \qquad \cosh z = \frac{e^z + e^{-z}}{2}, \qquad \tanh z = \frac{\sinh z}{\cosh z}$$

Relation to Trigonometric Functions:

$$\sinh z = -i \sin iz, \qquad \cosh z = \cos iz, \qquad \tanh z = -i \tan iz$$

Series Expansions:

$$\sinh z = z + \frac{z^3}{3!} + \frac{z^5}{5!} + \ldots.$$

$$\cosh z = 1 + \frac{z^2}{2!} + \frac{z^4}{4!} + \ldots.$$

Negative angle Formulas:

$$\sinh(-z) = -\sinh z,$$

$$\cosh(-z) = \cosh z,$$

$$\tanh(-z) = -\tanh z$$

Differentiation Formulas:

$$\frac{d}{dz}\sinh z = \cosh z,$$

$$\frac{d}{dz}\cosh z = \sinh z,$$

$$\frac{d}{dz}\tanh z = \cosh^2 z$$

Addition Formulas:

$$\sinh(z_1 + z_2) = \sinh z_1 \cosh z_2 + \cosh z_1 \sinh z_2$$

$$\cosh(z_1 + z_2) = \cosh z_1 \cosh z_2 + \sinh z_1 \sinh z_2$$

$$\tanh(z_1 + z_2) = \frac{\tanh z_1 + \tanh z_2}{1 + \tanh z_1 \tanh z_2}$$

Half Angle Formulas:

$$\sinh \frac{z}{2} = \left(\frac{\cosh z - 1}{2}\right)^{1/2}$$

$$\cosh \frac{z}{2} = \left(\frac{\cosh z + 1}{2}\right)^{1/2}$$

$$\tanh \frac{z}{2} = \left(\frac{\cosh z - 1}{\cosh z + 1}\right)^{1/2}$$

Multiple Angle Formulas:

$$\sinh 2z = 2\sinh z \cosh z = \frac{2\tanh z}{1 - \tanh^2 z}$$

$$\cosh 2z = \cosh^2 z + \sinh^2 z$$

$$\tanh 2z = \frac{2\tanh z}{1 + \tanh^2 z}$$

$$\sin 3z = 3\sinh z + 4\sinh^3 z$$

$$\cos 3z = -3\cosh z + 4\cosh^3 z$$

Products of sinhz and coshz:

$$2\sinh z_1 \sinh z_2 = \cosh(z_1 - z_2) - \cosh(z_1 + z_2)$$
$$2\cosh z_1 \cosh z_2 = \cosh(z_1 - z_2) + \cosh(z_1 + z_2)$$
$$2\sinh z_1 \cosh z_2 = \sinh(z_1 - z_2) + \sinh(z_1 + z_2)$$

Addition and Subtraction of Two Hyperbolic Functions

$$\sinh z_1 + \sinh z_2 = 2\sinh\frac{z_1 + z_2}{2}\cosh\frac{z_1 - z_2}{2}$$
$$\sinh z_1 - \sinh z_2 = 2\cosh\frac{z_1 + z_2}{2}\sinh\frac{z_1 - z_2}{2}$$
$$\cosh z_1 + \cosh z_2 = 2\cosh\frac{z_1 + z_2}{2}\cosh\frac{z_1 - z_2}{2}$$
$$\cosh z_1 - \cosh z_2 = -2\sinh\frac{z_1 + z_2}{2}\sinh\frac{z_1 - z_2}{2}$$
$$\tanh z_1 + \tanh z_2 = \frac{\sinh(z_1 + z_2)}{\cosh z_1 \cosh z_2}$$

Relation between Squares of Hyperbolic Functions:

$$\sinh^2 z_1 - \sinh^2 z_2 = \sinh(z_1 + z_2)\sinh(z_1 - z_2)$$
$$\sinh^2 z_1 + \cosh^2 z_2 = \sinh(z_1 + z_2)\sinh(z_1 - z_2)$$
$$\cosh^2 z_1 - \sin^2 z_2 = 1$$
$$\tanh^2 z_1 + \cos^{-2} z_2 = 1$$
$$\tanh^{-2} z_1 - \sinh^{-2} z_2 = 1$$

De Movrie's Theorem

$$\left(\sinh z + \cosh z\right)^n = \sinh nz + \cosh nz$$

Appendix K: THE EXPONENTIAL FUNCTION

An interesting question from a mathematical point of view is: What function has a derivative that is equal to the function itself? If one imagines that this function can be represented by an infinite series, then one can guess such a series:

$$1+x+\frac{x^2}{2!}+\frac{x^3}{3!}+\frac{x^4}{4!}+\frac{x^5}{5!}+.....+\frac{x^n}{n!}+.....$$

If we differentiate this with respect to x, we see that the first term gives 0, but the next x, the next $x^2/2!$, and so on, so that we have just what we started with. We now define this function as e^x . What is *e*? Setting $x = 1$, we have $e^1 = e$. Thus

$$e=1+1+\frac{1}{2!}+\frac{1}{3!}+\frac{1}{4!}+\frac{1}{5!}+.....+\frac{1}{n!}+.....=2.7183...$$

One of the reasons that such a quantity is important in physics is that we very often meet with an equation $dy/dx = ky$ or the derivative of y is equal to a constant times y. We see that we can write $dy/(kdx) = y$; and if we let kx be the independent variable z, then $dy/dz = y$. It is easy to see that $y= e^z= e^{kx}$ is a function that satisfies our equation. Therefore we have found a *solution* to the equation $dy/dx = ky$.

Note here that the series for e^x looks a little like the series for sine and *cosine*, except that in the sine and *cosine* the terms alternate in sign and have only odd or even powers of x, respectively. Those with experience in mathematics know that $\sqrt{(-1)}= i$ when raised to increasing powers alternates in sign. Let us see what $e^{i\theta}$ looks like:

$$\begin{aligned} e^{i\theta} &= 1+i\theta+\frac{(i\theta)^2}{2!}+\frac{(i\theta)^3}{3!}+\frac{(i\theta)^4}{4!}+\frac{(i\theta)^5}{5!}+.....\\ &=\left\{1-\frac{\theta^2}{2!}+\frac{\theta^4}{4!}-\frac{\theta^6}{6!}-....\right\}+i\left\{\theta-\frac{\theta^3}{3!}+\frac{\theta^5}{5!}-\frac{\theta^7}{7!}+...\right\} \end{aligned}$$

which is just $\cos\theta + i\sin\theta$. This relation is called *De'Moivre's* theorem.

Derivative and integral:

$$\frac{d^n}{dx^n}e^{-cx}=(-1)^n c^n e^{-cx}, \qquad \int dx e^{-cx}=-c^{-1}e^{-cx}$$

Alternative representation:

$$e^x=\lim_{n\to\infty}\left\{1+\frac{x}{n}\right\}^n, e^x=\cosh x+\sinh x,$$

$$e^{-x}=\cosh x-\sinh x$$

Appendix L: THE PROBABILITY INTEGRAL $\Phi(x)$

Also called the *error function* and denoted by "erf(x)"

Definition:

$$\Phi(x) = \frac{2}{\sqrt{\pi}} \int_0^x dt e^{-t^2}$$

Series Expansion:

$$\Phi(x) = \frac{2}{\sqrt{\pi}} \sum_{n=0}^{\infty} \frac{(-1)^n}{n!(2n+1)} x^{2n+1}$$

Derivative:

$$\frac{d^{n+1}\Phi(x)}{dx^{n+1}} = (-1)^n \frac{2}{\sqrt{\pi}} H_n(x) e^{-x^2}$$

where H_n denotes the Hermite polynomial of order n

Integral:

$$\int dx \Phi(x) = x\Phi(x) + \frac{1}{\sqrt{\pi}} e^{-x^2}$$

Symmetry Relation:

$$\Phi(-x) = \Phi(x)$$

Asymptotic Value:

$$\Phi(x) \approx 1 - \frac{0.739737}{x}, \qquad x \to \infty$$

Polynomial approximation:

$$\Phi(x) \approx 1 - \left(a_1 t + a_2 t^2 + a_3 t^3\right) + \varepsilon, \qquad \varepsilon \approx 10^{-15}$$

$$where \;\; a_1 = 0.3480242, \quad a_2 = 0.0958798, \quad a_3 = 0.7478556$$

$$and \quad t = \frac{1}{1+px}, \qquad p = 0.47047$$

Relation to the Normal Distribution Function:

$$\frac{1}{\sqrt{2\pi}\sigma} \int_{-\infty}^{x} dt \exp\left\{-\frac{(t-\mu)^2}{2\sigma^2}\right\} = \frac{1}{2}\left\{1 + \Phi\left(\frac{x-\mu}{\sqrt{2}\sigma}\right)\right\}$$

Where μ is the mean and σ is the standard deviation of the normal distribution

Appendix M: THE BINOMIAL COEFFICIENTS: PROPERTIES & VALUES

$$C_N(n) \equiv \binom{N}{n} \equiv \frac{N!}{n!(N-n)!}$$

$$\binom{N}{n} = \binom{N}{N-n}$$

$$\binom{N+1}{n} = \binom{N}{n}\binom{N}{n-1}$$

$$1 + \binom{N}{1} + \binom{N}{2} + \ldots\ldots \binom{N}{N} = 2^N$$

$$1 - \binom{N}{1} + \binom{N}{2} - \ldots\ldots (-1)^N \binom{N}{N} = 2^N$$

$$\binom{N}{1} + 2\binom{N}{2} + \ldots\ldots N\binom{N}{N} = N2^{N-1}$$

$$1 + \binom{N}{1}^2 + \binom{N}{2}^2 + \ldots\ldots \binom{N}{N}^2 = \binom{2N}{N}$$

Table 1 : Binomial Coefficients

	0	1	2	3	4	5	6	7	8	9	10	11	12
1	1	1											
2	1	2	1										
3	1	3	3	1									
4	1	4	6	4	1								
5	1	5	10	10	5	1							
6	1	6	15	20	15	6	1						
7	1	7	21	35	35	21	7	1					
8	1	8	28	56	70	56	28	8	1				
9	1	9	36	84	126	126	84	36	9	1			
10	1	10	45	120	210	252	210	120	45	10	1		
11	1	11	55	165	330	462	462	330	165	55	11	1	
12	1	12	66	220	495	792	924	792	495	220	66	12	1